seca

# Mod. 727

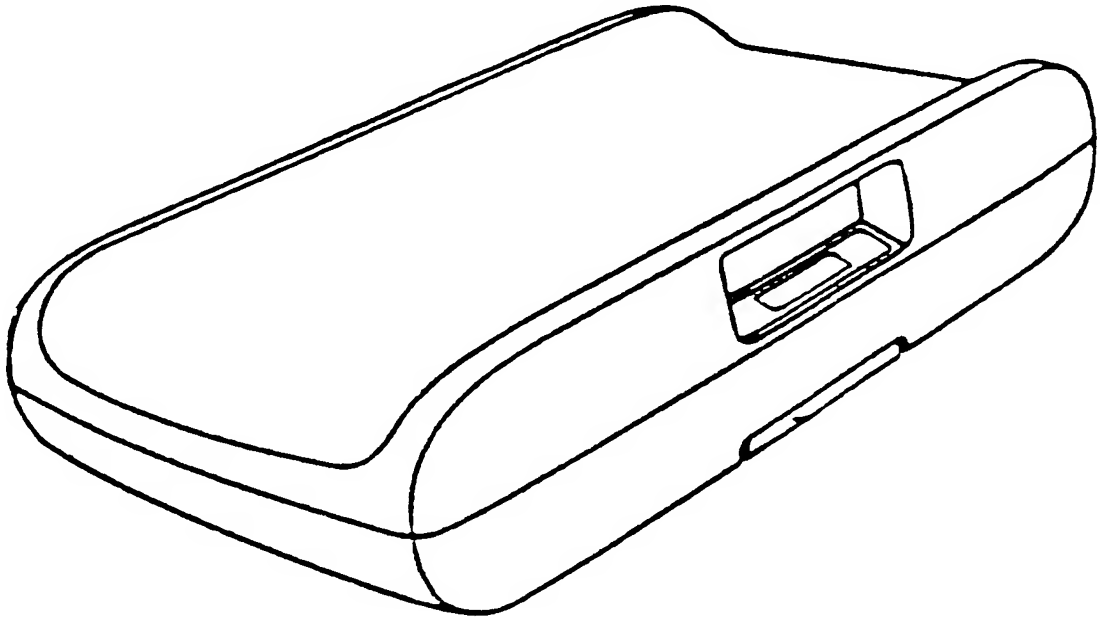

# Service-Unterlagen

# Service Manual

17-05-01-224

04/85 E Iv

seca Meß- und Wiegetechnik Vogel & Halke GmbH & Co P O B 76 11 80 2000 Hamburg 76 BRD Tel 040/ 20 00 00-0 Fax 040/ 20 00 00 50
seca ltd Weighing and Measuring Systems seca House 40 Barn Street Gigbeth Birmingham B5 5QB England Telephone 021 643 9349
seca sarl Appareils de Pesage et de Mesure BP 29 Z I Rue Lavoisier 91430 gny France Telephone 1) 60 19 07 54 Telex 60 13 08 eposeca
seca ag Meß- und Wiegetechnik Appareils de Pesage et de Mesure Postfach Schönmattstrasse 4 CH 4153 Reinach BL Tel 061 76 03 00
seca corporation Weighing and Measuring Systems 8920 A Route 108 Oakland Center Columbia Maryland 21045 USA Tel 301 964-38 58

with: Electric circuit diagram.
Assembly diagram.

## 1. The weighing unit

For load measuring a spring body made of copper-beryllium will be used. It carries 4 elastic strips (DMS) coupled to an electric bridge. The load on the weighing tray compresses or releases the spring and so the resistance of the bridges. The increase or reduction of the bridge resistance changes the output signal:

$U_a = k \times U_s \times F$ $U_A$ F

## 2. The pre-amplifier

The small output signal of the DMS weighing strips will be amplified strongly with the operation amplifier 8 which has nearly no drift. At the same time the NTC resistance combination 6,7 compensates the temperature influence for the weihging unit. Resistance 1,2 are for rough setting of the zero point.

## 3. The analog-digital transformer

The A/D transformer processes the output signal of the preamplifier. It operates with frequency modulation. All digital functions of the A/D transformer are performed with software in the µC. The reference potential of the A/D transformer will be set with resistances 12, 13, 26, 27 to U/2. During the pre-set total period T, the input voltage +Um goes over the resistance 11 and the reference voltage 0 V over the FET switch 19a, the resistances 14, 15, 16, 17, 18 to the input of the integrator. The elements are so designed that during this phase the integrator will integrate all input voltage up until the comparator 24a reacts. The reaction line of the comparator is given by the resistances 26 and 27. The resistance 25 produces a positive coupling and prevents oscillations of the comparator.

The reaction of the comparator 24a will be noted by the µC and then the FET switch will be switched off (19a). Now the integrator goes down during the whole T period. The time interval between T = 0 and the reaction of the comparator equals the input voltage Um.



seca Meß- und Wiegetechnik Vogel & Halke GmbH & Co. P.O.B. 76 11 80 2000 Hamburg 76 BRD Tel.: (040) 20 00 00-0 Fax (040) 20 00 00 50
seca ltd Weighing and Measuring Systems seca House 40 Barn Street Digbeth Birmingham B5 5QB England Telephone 021 643 9349
seca sarl Appareils de Pesage et de Mesure BP 29 Z. I. Rue Lavoisier 91430 Igny France Telephone: (1) 60.19.07.54 Telex 60 13 08 epbseca
seca ag Meß- und Wiegetechnik Appareils de Pesage et de Mesure Postfach Schonmattstrasse 4 CH 4153 Reinach BL1 Tel.: (061) 76 03 00
seca corporation Weighing and Measuring Systems 8920 A Route 108 Oakland Center Columbia Maryland 21045 USA Tel. (301) 964-38 58

The trimmer 15 is for Gal setting. 16 for fine indication adjustment. Since we hold the setting range of 16 very small, the indication may be set with a combination 17, 18.

Time diagram A/D transformer

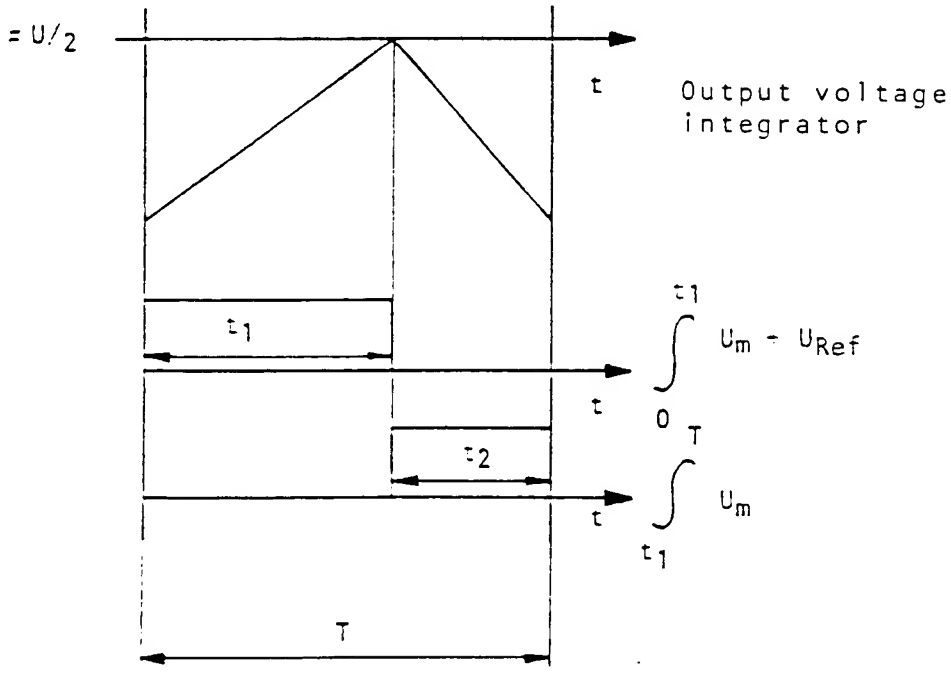


## 4. Microcomputer and Indication

The central calculation and control element is the one-chip µC 30 for the following functions:

- o A/D transformation (digital)
- o Zero point determination.
- o Voltage supply control (digital).
- o Automatic zero point setting.

All functions are with software in the ROM.



seca Meß- und Wiegetechnik Vogel & Halke GmbH & Co. P.O.B. 76 11 80 2000 Hamburg 76 BRD Tel.: (040) 20 00 00-0 Fax: (040) 20 00 00 50
seca ltd. Weighing and Measuring Systems seca House 40 Barn Street Digbeth Birmingham B5 5QB England Telephone: 021 643 9349
seca sarl Appareils de Pesage et de Mesure BP 29 Z.I. Rue Lavoisier 91430 Igny France Telephone: (1) 60 19 07 54 Telex 60 13 08 eppseca
seca ag Meß- und Wiegetechnik Appareils de Pesage et de Mesure Postfach Schonmattstrasse 4 CH 4153 Reinach BL1 Tel.: (061) 76 03 00
seca corporation Weighing and Measuring Systems 8920 A Route 108 Oakland Center Columbia Maryland 21045 USA Tel.: (301) 964-38 58

Operation flow

After the start operation will be as follows:

Return

With elements 42, 43, 70 the µC will be returned to initial position.

Self-test

All ROM codes will be totalized and compared with a check number.

All RAM cells are written and read with 0H and FFH.

In case of faulty operation the segmentport (pin 8-15) will issue the information lololololo B and further activity will be stopped.

Cold start sequence

For ensuring a safe start up (i.e. thermic) of the analog electronics the cold start sequence is provided. As long as pin 34 will be on 1-potential the A/D transformer will operate, but its results will not be used. During the cold start period seca will be displayed. The cold start period is set with the time constants of 66 (R) and 67 (C). The gate 60b serves as comparator.

Zero point memory

The first A/D cycle after the cold start period serves for memorizing the zero point. Its Mo value goes to the memory and will then be deducted from all following values Mn.

Weight determination

The weight will be the result from the real measuring value (MI) less the zero point value (Mo) divided by 6:

$F = (MI - Mo) / 6.$

The internal resolution is 6x.



seca Meß- und Wiegetechnik · Vogel & Halke GmbH & Co. P.O.B. 76 11 80 · 2000 Hamburg 76 BRD · Tel.: (040) 20 00 00-0 Fax: (040) 20 00 00 50
seca ltd. · Weighing and Measuring Systems · seca House 40 Barn Street Digbeth Birmingham B5 5QB England Telephone: 021 643 9349
seca sarl · Appareils de Pesage et de Mesure BP 29 · Z.I. Rue Lavoisier 91430 Igny France Telephone: (1) 60.19.07.54 Telex: 60 13 08 epdseca
seca ag · Meß- und Wiegetechnik · Appareils de Pesage et de Mesure · Postfach Schonmattstrasse 4 · CH 4153 Reinach BL1 Tel.: (061) 76 03 00
seca corporation · Weighing and Measuring Systems 8920 A Route 108 Oakland Center · Columbia Maryland 21045 USA Tel.: (301) 964-38 58

If F = 1/4 d the zero point indicator will be addressed and 00,00 displayed.

Since all functions are binary the result F must first go into the BCD code and then be transformed into the 7-segment-display.

Display

The real weight F will be displayed with a 5 digit 7-segment-LED-Indication (1-5) addressed by multiplex.

The microcomputer will issue the prepared 7-segment-information on port P4. Over the 8x-Darlington driver 32 and the 8x-resistance-network 33 the cathodes of the LEDs are addressed. The joint anodes are addressed over the corresponding digital transistor (38-41) to U = +5 V.

The segment information issued from the output port P4 are read back over the input port P 0 and compared. If they are not identical, "F" will be issued for the digit.

Overload signal

The real measuring value MI will be checked against 2 limit values:

a) Weighing range exceeded

at F = Fmax + 5 d STOP will be displayed.

b) Limit value exceeded

at F = Flim STOP will be displayed.

Voltage supply control (digital)

A voltage supply control may be connected to input 28. If this pin is on 0-potential the processor will stop the normal weighing cycle and display BATT.



seca Meß- und Wiegetechnik Vogel & Halke GmbH & Co. · P.O.B. 76 11 80 2000 Hamburg 76 · BRD Tel. (040) 20 00 00-0 Fax (040) 20 00 00 50
seca ltd Weighing and Measuring Systems seca House 40 Barn Street Digbeth Birmingham B5 5QB England Telephone 021 643 9349
seca sarl Appareils de Pesage et de Mesure BP 29 · Z.I. Rue Lavoisier 91430 Igny France Telephone: (1) 60.19 07.54 Telex 60 13 08 epposeca
seca ag Meß- und Wiegetechnik Appareils de Pesage et de Mesure Postfach Schonmattstrasse 4 CH 4153 Reinach BL1 Tel. (061) 76 03 00
seca corporation Weighing and Measuring Systems 8920 A Route 108 Oakland Center Columbia Maryland 21045 USA Tel. (301) 964-38 58

## 5. Power supply

For the circuit two voltages will be available. Extra advantage points of this circuit are:

a) No power draw when the unit is inoperative.

b) Safe function also with small longitudinal voltage.

c) Reference element with small Tk (= less than 25 ppm/°C).

d) Operation period adjustable.

e) Low voltage control.

f) Discoupling of U analog and U digital.

g) Automatic change-over continuous/discontinuous operation.

h) Battery load with constant current.

Voltage stabilization

Power supply will be done either with the battery (discontinuous operation) or with the mains transformer (continuous operation). The unit will be made operative with the main switch. By pushing the start button the transistor 77 will be activated over 81, 82, and 96. The diode 79 prevents +Us voltage by switching off the power supply 81 in due time. The amplifier 21b compares voltage Us with voltage in the reference element 76 over the voltage cutter 73.

Its output signal addresses 19d and 78 and the longitudinal transistor 77 until the output voltage will have the required 5,7 V. The digital portion will be supplied over the buffer transistor 135 for discoupling.



seca Meß- und Wiegetechnik Vogel & Halke GmbH & Co. P.O.B. 76 11 80 2000 Hamburg 76 BRD Tel.: (040) 20 00 00-0 Fax: 040: 20 00 00 50
seca ltd. Weighing and Measuring Systems seca House 40 Barn Street Digbeth Birmingham B5 5QB England Telephone: 021 643 9349
seca sarl Appareils de Pesage et de Mesure BP 29 Z.I. Rue Lavoisier 91430 Igny France Telephone: (1) 60 19 07 54 Telex: 60 13 08 epcseca
seca ag Meß- und Wiegetechnik Appareils de Pesage et de Mesure Postfach Schonmattstrasse 4 CH 4153 Reinach BL1 Tel.: (061) 76 03 00
seca corporation Weighing and Measuring Systems 8920 A Route 108 Oakland Center Columbia Maryland 21045 USA Tel.: (301) 964-38 58

Discontinuous operation

If no voltage Ue will be available the power supply will be made from the battery and the scale will switch automatically to discontinuous operation. When pushing the start button the condenser 108 will release its full load over 107 and 109 so that the outputs of gates 100b, c, d will go to 0 V (these are supplied from the battery) for activating the transistor 103. After about 55 sec. the condenser 108 will have back its switch load of 100a over 105 and the output of 100b, c, d will address +UB and the transistor 103 will cut so that the scale will be switched off.

Continuous operation

When supplying a +Ue voltage from the mains the scale will switch over automatically from discontinuous to continuous operation. The loading current for the battery will come from the self-oscillating transformer 120-123. When the transistor 126 is activated, the unit 120 will be loaded with constant energy which goes over diode 118 into the battery whilst transistor 126 will be closed. Over 113 and 110 gates 100 are so addressed that the transistor 103 will close for protecting the battery.

Low voltage control

Safe control will be possible onyl with a given minimal input voltage. The comparator 24b compares over resistances 93, 94, 95 the input voltage with the reference voltage. If input voltage will be under the damissible value, the comparator 24b will address a signal to the µC and then BATT will be displayed.



seca Meß- und Wiegetechnik Vogel & Halke GmbH & Co. P O B 76 11 80 2000 Hamburg 76 BRD Tel. (040) 20 00 00-0 Fax 040 20 00 00 50
seca ltd. Weighing and Measuring Systems seca House 40 Barn Street Digbeth Birmingham B5 5QB England Telephone 021 643 9349
seca sarl Appareils de Pesage et de Mesure BP 29 Z. I. Rue Lavoisier 91430 Igny France Telephone (1) 60 19 07 54 Telex 60 13 08 epseca
seca ag Meß- und Wiegetechnik Appareils de Pesage et de Mesure Postfach Schonmattstrasse 4 CH 4153 Reinach BL1 Tel. (061) 76 03 00
seca corporation Weighing and Measuring Systems 8920 A Route 108 Oakland Center Columbia Maryland 21045 USA Tel. 301) 964-38 58

- Set the calibrated transformer to +8 V out voltage.
- Set the breaking current of the transformer to I max = 1 A.
- Switch off the transformer.
- Connect the transformer to M78 = ⊥ and M77 = $U_e$ = +.
- Brace-circuit M63 and M64 (main switch).
- Conncect the voltmeter (10 V =) to M78 = ⊥ and M48 = +.
- Switch on transformer, start module (connect M61 with M78 for a short period) and watch the ammeter. Current draw should be = < 300 mA.
- Voltage at M48 should be $U_{48}$ = $V_{cc}$ = 4,7 V ... 5,5 V.
- Should voltage $U_{48}$ exceed 5,5 V switch off the transformer immediately and trace the error. If excessive voltage should be hold too long, the microcomputer may be dammaged.
- Check voltage at M51 and make a note of it. $U_{51}$ = U analog = 5,5 V ... 6,5 V.
- Scale must remain operative.
- Put in program bridge G (B2) (pin 27 to µC, zero point indication).
- Put in program bridge D (B6) (pin 37 to µC, 20,0 kg model).
- Put all trimmer to central position.
- Take any weight from the tray $F_o$ = < 100 g.

Check voltage $U_5$ M5 - M78 (⊥)

= $U_5 \geq U_{51}/2 + 0,3$ V decade A for 1 (M1 - M51)

= $U_5 \leq U_{51}/2 + 0,3$ V decade A for 2 (M1 - M78)



seca Meß- und Wiegetechnik Vogel & Halke GmbH & Co. P.O.B. 76 11 80 2000 Hamburg 76 BRD Tel. (040) 20 00 00-0 Fax 040) 20 00 00 50
seca ltd Weighing and Measuring Systems seca House 40 Barn Street Digbeth Birmingham B5 5QB England Telephone 02' 643 9349
seca sarl Appareils de Pesage et de Mesure BP 29 Z.I. Rue Lavoisier 91430 Igny France Telephone (1) 60.19.07.54 Telex 60 13 08 epposeca
seca ag Meß- und Wiegetechnik Appareils de Pesage et de Mesure Postfach Schonmattstrasse 4 CH 4153 Reinach BL' Tel. (061) 76 03 00
seca corporation Weighing and Measuring Systems 8920 A Route 108 Oakland Center Columbia Maryland 21045 USA Tel. (301) 964-38 58

- Operate decade A until $U_5 = U_{51}/2 + 0,3$ V.
- Start module.
- The A/D transformer should now operate (triangle function at M8).
- Operate decade A until indication = 0,75 kg (± 100 g).

  Attention! When turning decade A the A/D transformer may switch off. The module can then be started again.
- Take off program bridge G (B2).
- Start module (indication = 0.000 kg).
- Put on decade B for 18 (M7 - M78) and set to 100 kOhm.
- Put 10 kg load on the tray.

  Operate decade B until indication = 16 kg ± 20 g.

  Attention! When doing this the zero point may change.

  Take load from the tray, start module (indication = 0.000 kg).

  Repeat this until getting the following:

  F = 10 kg indication = 16 kg ± 20 g.
- Put in program bridge G (B2).
- Adjust zero point with decade A until indication will be 0,75 kg ± 100 g.
- Solder values of decades A+B with metal layer resistances (TK ≦ 50 ppm) of series E96 (next value).
- Check zero point:

  F = 0 kg indication = 0,75 kg ± 100 g.
- Take off program bridge G (B2).
- Start module (indication = 0.000 kg).



seca Meß- und Wiegetechnik Vogel & Halke GmbH & Co. P.O.B. 76 11 80 2000 Hamburg 76 BRD Tel.: (040) 20 00 00-0 Fax: (040) 20 00 00 50
seca ltd. Weighing and Measuring Systems seca House 40 Barn Street Digbeth Birmingham B5 5QB England Telephone 021 643 9349
seca sarl Appareils de Pesage et de Mesure BP 29 Z.I. Rue Lavoisier 91430 Igny France Telephone (1) 60.19.07.54 Telex. 60 13 08 epdseca
seca ag Meß- und Wiegetechnik Appareils de Pesage et de Mesure Postfach Schonmattstrasse 4 CH 4153 Reinach BL1 Tel.: (061) 76 03 00
seca corporation Weighing and Measuring Systems 8920 A Route 108 Oakland Center Columbia Maryland 21045 USA Tel.: (301) 964-38 58

- Indication control:

  F = 10 kg Indication = 16,00 kg ± 20 g.

- Reduce input voltage slowly $U_{77} = U_e$ (M77).

- Check voltage $U_{51} = U_s$ (M51).

  Voltage should vary ($U_{51}$) max. ± 10 mV until Batt will show up in the indication field.

  Batt should show up first at $U_{77}$ (M77) ≦ 7 V (typical for ≦ 6,5 V).

- Take load from the tray and start module.

- Check serial interface. Square pulsation sequence at M80 and M81.

- Control oscillator at M71. Frequency f = 100 kHz (± 20 kHz).

- Connect accu-package (8 cells à 1,2 V, 500 mAH) with minus to earth ⊥ (M78).

- Connect plus over ammeter (100 mA) to M68.

- Vary input voltage $U_e$ and watch batt-current. Batt-current may change max. as follows:

  $U_e$ = 8 V ... 12 V $I_L$ = 15-35 mA.

- Set input voltage $U_e$ to 8 V and switch off the mains transformer.

- Connect positive pole of the transformer to M63, wait for 15 sec. and switch on the transformer.

- Start module and watch the time. Indication period should be 55 sec. (± 10 sec.).



seca Meß- und Wiegetechnik Vogel & Halke GmbH & Co P.O.B. 76 11 80 2000 Hamburg 76 · BRD Tel. (040) 20 00 00-0 Fax (040) 20 00 00 50
seca ltd Weighing and Measuring Systems seca House 40 Barn Street Digbeth Birmingham B5 5QB England Telephone. 021 643 9349
seca sarl Appareils de Pesage et de Mesure BP 29 Z I Rue Lavoisier 91430 Igny France Telephone. (1) 60.19.07.54 Telex 60 13 08 epseca
seca ag Meß- und Wiegetechnik Appareils de Pesage et de Mesure Postfach Schonmattstrasse 4 CH 4153 Reinach BL1 Tel. (061) 76 03 00
seca corporation Weighing and Measuring Systems 8920 A Route 108 Oakland Center Columbia Maryland 21045 USA Tel. (301) 964-38 58

Temperature check + seasoning

- o Bring modules in a warm clima chamber (40° C), switch on and operate min. 12 h in a 120-sec.-cycle.
- o Put in program bridge G (B2) (indication of zero point).
- o Take a note of the following value at 40° C:

  F = 0 kg FOT40 = .... kg
- o Take off program bridge G (B2) and start module (indication = 0.000 kg).
- o Take a note of the following value at 40° C:

  F = 10 kg F10T40 = ... kg
- o Cool down module to 15° C and wait for min. 2 h.
- o Put in program bridge G (B2) (indication of zero point).
- o Take a note of the following value at 15° C:

  F = 0 kg FOT15 = ... kg
- o Take off program bridge G (B2) and start module (indication = 0.000 kg).
- o Take a note of the following value at 15° C:

  F = 10 kg F10T15 = ... kg
- o The following tolerances of the compensated module will be admissible:

  zero point drift: FOT40 - FOT15 = ± 500 g
  indication drift: F10T40 - F10T15 = ± 90 g
- o Should indication drift be more than 90 g, solder resistance R6 to basic-program RP727No.01.KLI and repeat the temperature check.
- o Take off program bridge G (B2).
- o Take off program bridge D (B6).



seca Meß- und Wiegetechnik Vogel & Halke GmbH & Co. P.O.B. 76 11 80 2000 Hamburg 76 BRD Tel.: (040) 20 00 00-0 Fax: 040) 20 00 00 50
seca ltd Weighing and Measuring Systems seca House 40 Barn Street Digbeth Birmingham B5 5QB England Telephone 021 643 9349
seca sarl Appareils de Pesage et de Mesure BP 29 Z.I. Rue Lavoisier 91430 Igny France Telephone (1) 60 19 07 54 Telex 60 13 08 epbseca
seca ag Meß- und Wiegetechnik Appareils de Pesage et de Mesure Postfach Schonmattstrasse 4 CH 4153 Reinach BL1 Tel.: (061) 76 03 00
seca corporation Weighing and Measuring Systems 8920 A Route 108 Oakland Center Columbia Maryland 21045 USA Tel.: 301) 964-38 58

## Installation and final check

- Assemble the scales completely.
- Install the accu-package, connect the scale to the mains transformer, switch on and start operation.
- Load the unit with 14 kg and adjust the indication with 16.

  Attention! When doing this the zero point will change.

  Take off the load and set to zero (indication = 0.000 kg).

  Repeat this until the following value will show up:

  F = 14 kg Indication = 14,00 kg ± 20 g.
- Load the unit with 15 kg and set to zero. Increase load slowly and watch whether STOP will show up in the indication field over 6-7 kg. If this should not be so the internal zero point is not set correctly.
- Take load from the unit, unwire the mains transformer and start the unit (accu-operation). Indication should switch off after about 55 sec.
- Switch off the unit.



seca Meß- und Wiegetechnik Vogel & Halke GmbH & Co. P.O.B. 76 11 80 2000 Hamburg 76 BRD Tel.: (040) 20 00 00-0 Fax (040) 20 00 00 50
seca ltd. Weighing and Measuring Systems seca House 40 Barn Street Digbeth Birmingham B5 5QB England Telephone 021 643 9349
seca sarl Appareils de Pesage et de Mesure BP 29 - Z.I. Rue Lavoisier 91430 Igny France Telephone (1) 60 19 07 54 Telex 60 13 08 epposeca
seca ag Meß- und Wiegetechnik - Appareils de Pesage et de Mesure Postfach Schonmattstrasse 4 CH 4153 Reinach BL1 Tel. (061) 76 03 00
seca corporation Weighing and Measuring Systems 8920 A Route 108 Oakland Center Columbia Maryland 21045 USA Tel.: (301) 964-38 58

to: Components draw.
Electric flow dia.

## 1. Checking power supply

- Connect the unit with the transformer to the mains and start it.

- Voltage check

  - between M78 and M51 5,45 to 5,95 V

  - between M78 and M48 4,75 to 5,25 V

  Should this voltage not be available, change main platine as per instructions 30-34-00-321.

## 2. Zero point check

- Put in bridge B2.

- Take load off unit and start

  The indication shows about 4 kg or the value given on the sticker. If the value should be for ± 1 kg, change the main platine as per instructions 30-34-00-321.

## 3. Weight increase check

- Start the unit.

- Check indication with weights (about 14 kg) and adjust with trimmer 16 if necessary. If setting range will not be sufficient, remove resistance 18 and get new value with resistance decade.

  Attention: Zero point will also change with the setting!

  When setting is done check zero point (2.).

  If setting will not be possible, change main platine to instructions 30-34-00-321.



seca Meß- und Wiegetechnik Vogel & Halke GmbH & Co P.O.B. 76 11 80 2000 Hamburg 76 BRD Tel. (040) 20 00 00-0 Fax (040) 20 00 00 50
seca ltd. Weighing and Measuring Systems seca House 40 Barn Street Digbeth Birmingham B5 5QB England Telephone 021 643 9349
seca sarl Appareils de Pesage et de Mesure BP 29 Z.I. Rue Lavoisier 91430 Igny France Telephone (1) 60 19 07 54 Telex 60 13 08 epposeca
seca ag Meß- und Wiegetechnik Appareils de Pesage et de Mesure Postfach Schonmattstrasse 4 CH 4153 Reinach BL1 Tel. (061) 76 03 00
seca corporation Weighing and Measuring Systems 8920 A Route 108 Oakland Center Columbia Maryland 21045 USA Tel. (301) 964-38 58

## 4. Mechanical check

o Optical check.

o Check over-load stop.

o Make sure that the lever system operates smoothly without hooking.

If any part should be defective sent back the unit for repair.

## 5. Trouble shooting

An optical check should always be made for correct soldering, corrosion, dirt and assembly.

o Unit cannot be started:

- See point 1.
- See point 2.

Possible troubles:
a) Power supply.
b) Load tray.
c) A/D transformer.
d) Quartz.
e) µC.

o After the start a weight will be indicated:

- See point 2.

Possible trouble: a) Load tray.

o Indication dose not react to small load:

- See point 2.
- See point 4.

Possible troubles:
a) Load tray.
b) Mechanical system.



seca Meß- und Wiegetechnik Vogel & Halke GmbH & Co. P.O.B. 76 11 80 2000 Hamburg 76 BRD Tel. (040) 20 00 00-0 Fax (040) 20 00 00 50
seca ltd. Weighing and Measuring Systems seca House 40 Barn Street Digbeth Birmingham B5 5QB England Telephone 021 643 9349
seca sarl Appareils de Pesage et de Mesure BP 29 Z.I Rue Lavoisier 91430 Igny France Telephone (1) 60 19 07 54 Telex 60 13 08 appseca
seca ag Meß- und Wiegetechnik Appareils de Pesage et de Mesure Postfach Schonmattstrasse 4 CH 4153 Reinach BL1 Tel. (061) 76 03 00
seca corporation Weighing and Measuring Systems 8920 A Route 108 Oakland Center Columbia Maryland 21045 USA Tel. (301) 964-38 58

o Indication flickers under load:

- See point 2.
- See point 3.

Possible troubles: a) Load tray.
b) A/D transformer.

o Wrong load indication:

- See point 3.

Possible trouble: a) A/D transformer



seca Meß- und Wiegetechnik Vogel & Halke GmbH & Co P.O.B. 76 11 80 2000 Hamburg 76 BRD Tel.: (040) 20 00 00-0 Fax: (040) 20 00 00 50
seca ltd. Weighing and Measuring Systems seca House 40 Barn Street Digbeth Birmingham B5 5QB England Telephone 021 643 9349
seca sarl Appareils de Pesage et de Mesure BP 29 Z.I. Rue Lavoisier 91430 Igny France Telephone (1) 60 19 07 54 Telex 60 13 08 epsseca
seca ag Meß- und Wiegetechnik Appareils de Pesage et de Mesure Postfach Schonmattstrasse 4 CH-4153 Reinach BL1 Tel.: (061) 76 03 00
seca corporation Weighing and Measuring Systems 8920 A Route 108 Oakland Center Columbia Maryland 21045 USA Tel.: (301) 964-38 58

REPLACEMENT INSTRUCTIONS

Model 727 Digital baby scale — Page - 1 -

## 1. Open scale

- Turn the unit bottom up (fig. 1). Take out the low voltage plug.
- Undo the 4 screws "A" and the 2 cross head screws "B".
- Turn the scale over again and remove the top half of the baby tray (fig. 2). All exchangeable parts are now accessible from the top (fig. 3).

## 2. Changing the electronic system with transducer

- Remove the socket connector "C" from the circuit board. Remove the individual wires -11, +10 and -7, +8, 1, 2, 12, and 13 from the circuit board.
- Undo the transistor "D" from the base plate. One hex-bolt (spanner S 5,5). Attention: Do not lose the counter nut.
- Undo the cross beam "L" with the transducer - 2 crosshead screws. Unhook the transducer from the S-hook. Attention: Do not lose the counter nut.
- Undo 4 crosshead screws "E" which hold the circuit board. Attention: Do not lose the counter nut.
- Remove the circuit board with transducer and transistor towards the back.
- Place the new circuit board with transudcer into the scale. Hook transducer onto the S-hook.

Reassembling of the components should now be done in reverse order to the above. Care should be taken to the following points:

- Do not break the soldered connections between the transducer and the circuit board.
- Screw earth cable "M" under the circuit board.
- It is important to put the insulating washer between transistor and base plate (fig. 4).

E 30-34-00-321/8

seca Meß- und Wiegetechnik Vogel & Halke GmbH & Co. P.O.B. 76 11 80 2000 Hamburg 76 BRD Tel. (040) 20 00 00-0 Fax (040) 20 00 00 50
seca ltd. Weighing and Measuring Systems seca House 40 Barn Street Digbeth Birmingham B5 5QB England Telephone 021 643 9349
seca sarl Appareils de Pesage et de Mesure BP 29 Z.I. Rue Lavoisier 91430 Igny France Telephone (1) 60 19 07 54 Telex 60 13 08 epseca
seca ag Meß- und Wiegetechnik Appareils de Pesage et de Mesure Postfach Schonmattstrasse 4 CH 4153 Reinach BL1 Tel. (061) 76 03 00
seca corporation Weighing and Measuring Systems 8920 A Route 108 Oakland Center Columbia Maryland 21045 USA Tel. (301) 964-38 58

- Connecting wires should not touch the lever mechanism.

- Check the mechanical overload stop - adjustment with screw "N".

- Readjust the scale - indication setting with setting poti "0".

3. Changing the display unit with the zero setting switch

---

o Remove the socket connector "C" from the circuit board.

o Undo the crosshead screws with cable clamp "G". Attention: Do not lose the counter nut.

o Undo the 2 screws "H" for indicator circuit board and switch, take out the red screen.

o Remove the wire under the circuit board (earth) and the holder "K" (base plate).

o Insert the new indicator board with zero setting switch. Assemble in reverse order. Watch the following:

- Pull the wires through first.

- Slide the indicator circuit board on its brackets as far as it will go.

- Replace the red screen with spacers. Align the switch to the button and check its function.



seca Meß- und Wiegetechnik Vogel & Halke GmbH & Co P.O.B. 76 11 80 2000 Hamburg 76 BRD Tel. (040) 20 00 00-0 Fax (040) 20 00 00 50
seca ltd Weighing and Measuring Systems seca House 40 Barn Street Digbeth Birmingham B5 5QB England Telephone 021 643 9349
seca sarl Appareils de Pesage et de Mesure BP 29 Z.I. Rue Lavoisier 91430 Igny France Telephone (1) 60 19 07 54 Telex 60 13 08 epaseca
seca ag Meß- und Wiegetechnik Appareils de Pesage et de Mesure Postfach Schonmattstrasse 4 CH 4153 Reinach BL1 Tel. (061) 76 03 00
seca corporation Weighing and Measuring Systems 8920 A Route 108 Oakland Center Columbia Maryland 21045 USA Tel. (301) 964-38 58

## 4. Changing plug connection, main switch, battery connection, change-over kg/lbs

These components are exchangeable complete with their wiring. Disconnection is at the main circuit board.

Ref.-Nos. of connecting points:

| | | | |
|---|---|---|---|
| o | Plug Connection | Ref. | -11 and +10 |
| o | Main switch | Ref. | 1 and 2 |
| o | Battery connection | Ref. | -7 and +8 |
| o | Change-over kg/lbs | Ref. | 12 and 13 |

## 5. Reclosing the scale

- Put the top part of the baby tray back on and, holding it together with the lower part, turn the unit over so that the base plate is uppermost.
- Put in the 2 crosshead screws "B" and the 4 screws "A" and tighten.



seca Meß- und Wiegetechnik Vogel & Halke GmbH & Co. P.O.B. 76 11 80 2000 Hamburg 76 BRD Tel.: (040) 20 00 00-0 Fax: (040) 20 00 00 50
seca ltd. Weighing and Measuring Systems seca House 40 Barn Street Digbeth Birmingham B5 5QB England Telephone: 021 643 9349
seca sarl Appareils de Pesage et de Mesure BP 29 Z.I. Rue Lavoisier 91430 Igny France Telephone: (1) 60 19 07 54 Telex 60 13 08 epdseca
seca ag Meß- und Wiegetechnik Appareils de Pesage et de Mesure Postfach Schönmattstrasse 4 CH 4153 Reinach BL1 Tel.: (061) 76 03 00
seca corporation Weighing and Measuring Systems 8920 A Route 108 Oakland Center Columbia Maryland 21045 USA Tel.: (301) 964-38 58

REPLACEMENT INSTRUCTIONS

Model 727 Digital baby scale — Page - 4 -

DIAGRAM 1

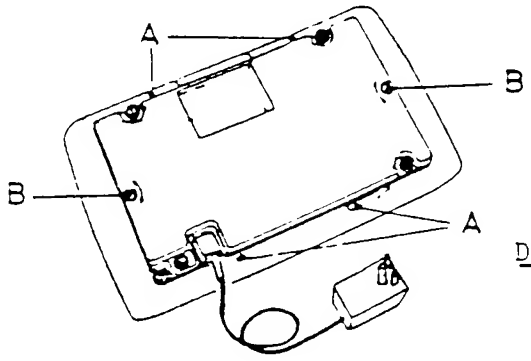


DIAGRAM 2

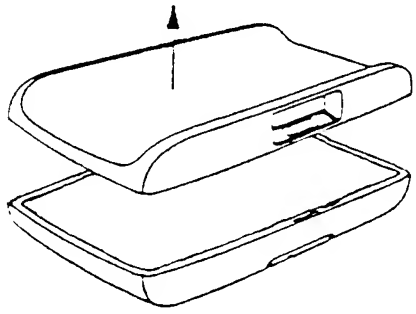

DIAGRAM 4

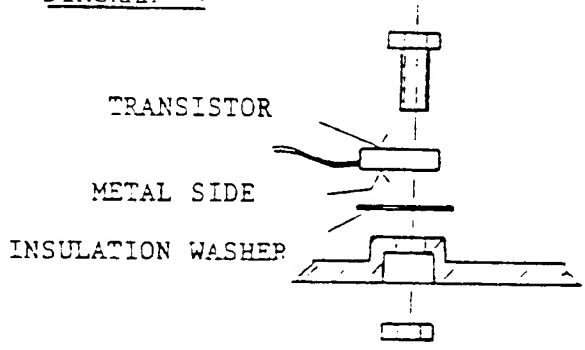


DIAGRAM 3

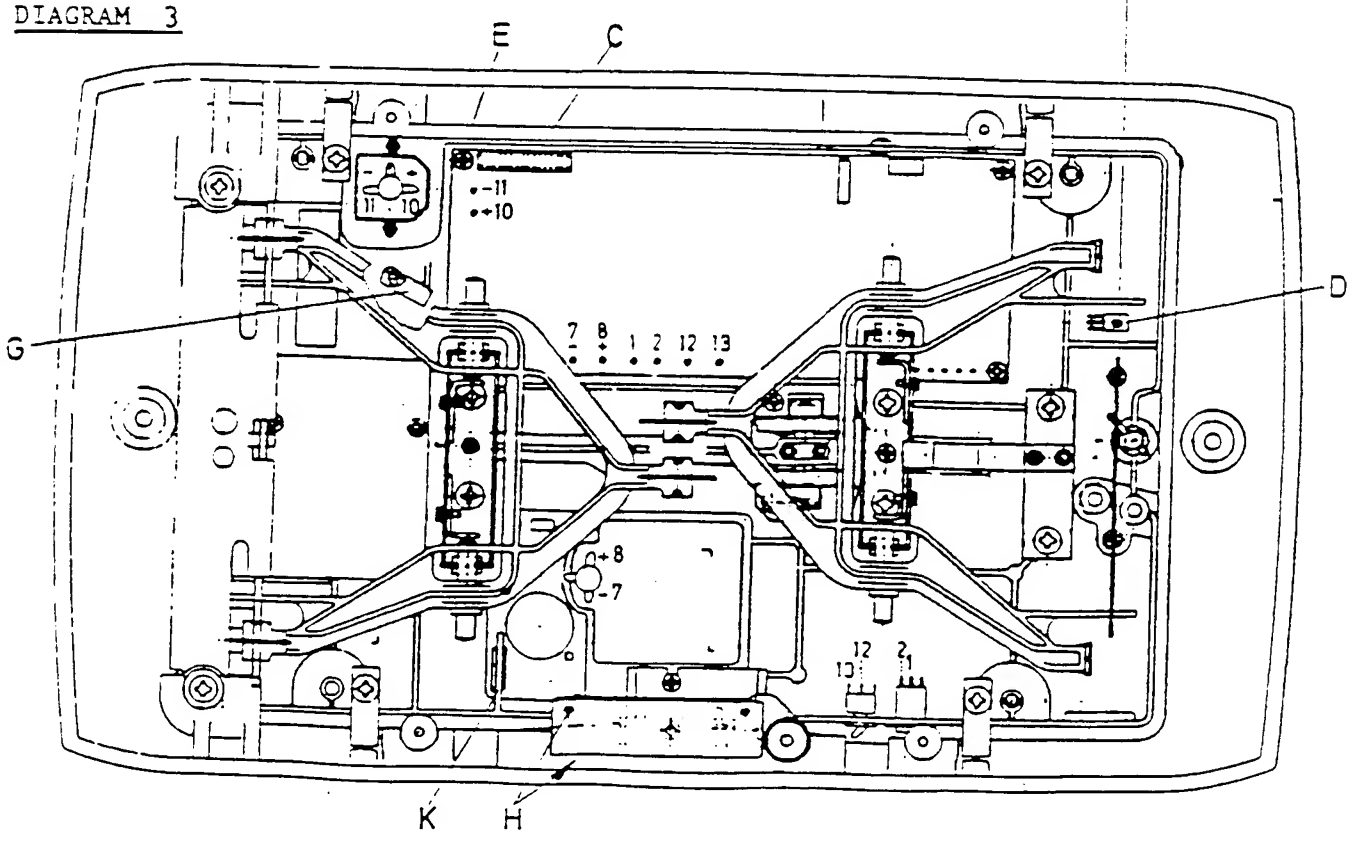


E 30-34-00-321/8

seca Meß- und Wiegetechnik Vogel & Halke GmbH & Co. P.O.B. 761180 2000 Hamburg 76 BRD Tel.: (040) 20 00 00-0 Fax (040) 20 00 00 50
seca ltd. Weighing and Measuring Systems seca House 40 Barn Street Digbeth Birmingham B5 5QB England Telephone 021 643 9349
seca sarl Appareils de Pesage et de Mesure BP 29 Z.I. Rue Lavoisier 91430 Igny France Telephone (1) 60 19 07 54 Telex 60 13 08 epseca
seca ag Meß- und Wiegetechnik Appareils de Pesage et de Mesure Postfach Schonmattstrasse 4 CH 4153 Reinach BL1 Tel. (061) 76 03 00
seca corporation Weighing and Measuring Systems 8920 A Route 108 Oakland Center Columbia Maryland 21045 USA Tel. (301) 964-38 58

seca

Ersatzteilliste

| Modell 727/747 Digitale Säuglingswaage | Blatt 1 |
|---|---|

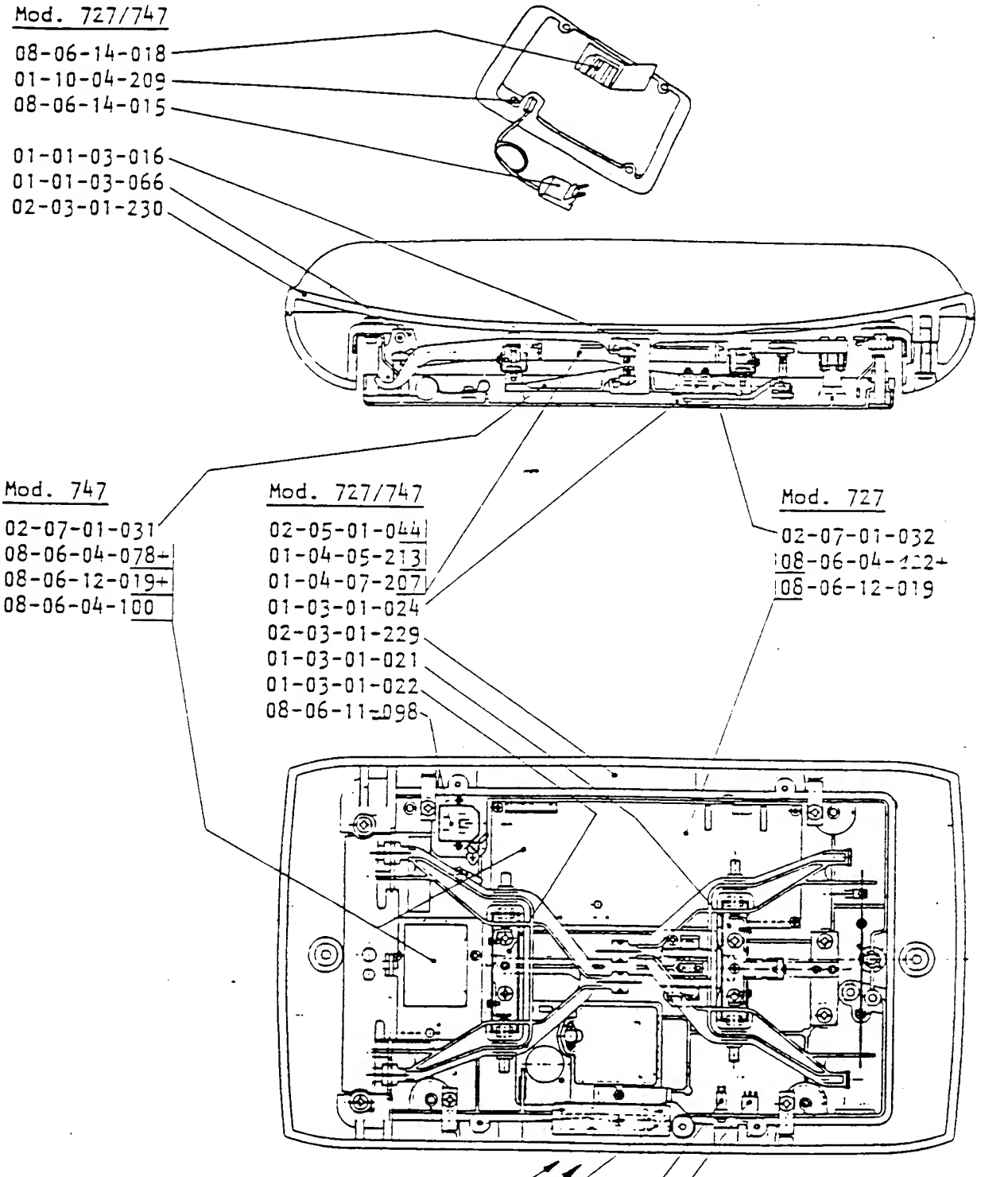


30-34-00-357

seca Meß- und Wiegetechnik Vogel & Halke GmbH & Co. P.O.B. 76 11 80 2000 Hamburg 76 BRD Tel. (040) 20 00 00-0 Fax (040) 20 00 00 50
seca ltd. Weighing and Measuring Systems seca House 40 Barn Street Digbeth Birmingham B5 5QB England Telephone 021 643 9349
seca sarl Appareils de Pesage et de Mesure BP 29 Z.I. Rue Lavoisier 91430 Igny France Telephone (1) 60 19 07 54 Telex 60 13 08 epseca
seca ag Meß- und Wiegetechnik Appareils de Pesage et de Mesure Postfach Schonmattstrasse 4 CH 4153 Reinach BL1 Tel. 061 76 03 00
seca corporation Weighing and Measuring Systems 8920 A Route 108 Oakland Center Columbia Maryland 21045 USA Tel. (301) 964-38 58

seca

# Spare parts list

Model 727 Digital Babyscale 

| Reference-No. | Description | Price |
|---|---|---|
| 08-06-04-*122* | Electonics with | 99 |
| 08-06-12-006 | Transducer complete (on part exchange basis) | |
| 02-03-01-229 | Lower part of babytray | 36 |
| 02-03-01-230 | Upper part of babytray | 39 |
| 01-22-13-232 | Digital display screen | 27 |
| 01-01-01-066 | Lever suspension bracket | 13 |
| 01-01-03-016 | Centre coupling | 16 |
| 02-05-01-044 | Lever | 34 |
| 02-07-01-032 | Transmission lever | 31 |
| 01-04-05-213 | Pivot knife edge | 18 |
| 01-04-07-207 | Lower lever | 08 |
| 01-05-05-208 | Mounting socket | 08 |
| 01-03-04-236 | Shock absorber | 08 |
| 01-03-01-021 | Lever pedestal | 23 |
| 01-03-01-022 | Lever pedestal with overload protection | 24 |
| 01-05-05-207 | Shock absorber | 08 |
| 01-03-01-024 | Pedestal | 18 |
| 02-03-01-232 | Zero push button | 23 |
| 01-10-04-209 | Foot | 17 |
| 08-06-14-018 | Battery holder with connection cable | 24 |
| 08-06-14-015 | Power pack (check market specification) | 36 |
| 08-06-12-033 | Power insertion | 08 |
| 08-06-11-063 | Display with zero push button and cable | 40 |
| 08-06-11-098 | Plug connection (check market specification) | 10 |
| 08-06-11-066 | Main switch (on/off) | 18 |
| 08-06-11-109 | kg/lbs selector switch | 18 |

30-34-00-384

seca Meß- und Wiegetechnik Vogel & Halke GmbH & Co. P O B 76 11 80 2000 Hamburg 76 BRD Tel.. (040) 20 00 00-0 Fax (040) 20 00 00 50
seca ltd Weighing and Measuring Systems seca House 40 Barn Street Digbeth Birmingham B5 5QB England Telephone. 021 643 9349
seca sarl Appareils de Pesage et de Mesure BP 29 Z I Rue Lavoisier 91430 Igny France Telephone (1) 60 19 07 54 Telex 60 13 08 epbseca
seca ag Meß- und Wiegetechnik Appareils de Pesage et de Mesure Postfach Schonmattstrasse 4 CH 4153 Reinach BL1 Tel.. (061) 76 03 00
seca corporation Weighing and Measuring Systems 8920 A Route 108 Oakland Center Columbia Maryland 21045 USA Tel.. (301) 964-38 58

Wort-Uebersetzung — word-translator

deutsch - englisch — german - english

* Stand: 04/85 *

| | |
|---|---|
| Analogschalter | analog switches |
| Anzeige | display |
| AND-Gatter | AND gate |
| Antiwaermescheibe | heat abduktion insulating disc |
| Anschlussplatine | connection board |
| Anzeigeplatine | display board |
| Analogsignalverarbeitung | analog signal processing |
| Abschirmung | shielding |
| Anschluss-Kasten | adapter kit,connection box |
| Aufloesung | graduation |
| Akku-Ladeschutzschaltung | accumulator charge and protect circuit |
| Anschlusskabel | power cord |
| Buchse | socket |
| Buchsenleiste | multipoint connector |
| Blechschraube | sheet screw |
| Blockschaltbild | block diagram |
| Bestueckungsplan | component diagram |
| Bohrplan | drill diagram |
| Batteriefach | battery compartment |
| C-Mos-RAM | CMOS-RAM |
| CPU | CPU |
| Diode | diode |
| D Flip-Flop | D flip-flop |
| Dekoder | decoder |
| Drossel | inductor |
| DIL-Schalter | DIL-switch |
| Draht | wire |
| Drahtbruecke | jumper |
| Digitalsignalverarbeitung | digital signal processing |
| Dehnung | tension |
| DIL-Widerstandsnetzwerk | DIL resistor network |
| Elektolyt-Kondensator | electrolytic capacitor |
| E-Prom | EPROM |
| Epoxydglasfaserplatte | epoxy glass plate |
| Empfindlichkeit | sensitivity |
| Empfindlichkeits-Kompensation | sensitivity compensation |
| Fassung | socket |
| Federscheibe | spring washer |
| Funktionsfehlererkennung | error recognition and identification |
| Frontplatte | front panel |
| HF-Drossel | HF-inductor |
| Hauptplatine | main board |
| Hauptschalter | main switch |
| IC | IC |
| Inverter | inverter |
| I/O-Baustein | peripheral interface |
| Isolierband | insulating tape |
| Kohleschichtwiderstand | carbon-film resistor |
| Kondensator | capacitor |
| Keramik-Kondensator | ceramic capacitor |
| Komparator | voltage comparator |
| Kuehlblech | cooling plate |
| Kuehlkoerper | dissipator |
| Kabel | cable |
| Kaltstartphase | warm-up time |
| Leitungsempfaenger | line receiver |
| Leitungstreiber | line driver |
| LED | LED |
| Loetstift | soldering pin |

seca Meß- und Wiegetechnik Vogel & Halke GmbH & Co P O B. 76 11 80 2000 Hamburg 76 BRD Tel. (040) 20 00 00-0 Fax 040) 20 00 00 50
seca ltd Weighing and Measuring Systems seca House 40 Barn Street Digbeth Birmingham B5 5QB England Telephone 021 643 9349
seca sarl Appareils de Pesage et de Mesure BP 29 Z.I. Rue Lavoisier 91430 Igny France Telephone (1) 60 19 07 54 Telex 60 13 08 epposeca
seca ag Meß- und Wiegetechnik Appareils de Pesage et de Mesure Postfach Schonmattstrasse 4 CH 4153 Reinach BL1 Tel. (061) 76 03 00
seca corporation Weighing and Measuring Systems 8920 A Route 108 Oakland Center Columbia Maryland 21045 USA Tel. (301) 964-38 58

| | |
|---|---|
| Loetfahne | soldering lug |
| Leiterplatte | printed wiring board |
| Loetseite | soldering side |
| Leuchtdiode | light emitting diode |
| Metallschichtwiderstand | metal-film resistor |
| MONO | monostable multivibrator |
| Metallfilmwiderstand | metal film resistor |
| NOR-Gatter | NOR gate |
| NAND-Gatter | NAND gate |
| Netzschalter | power switch |
| Netzteil | power supply |
| Netzanschluss | power adapter |
| Nullpunkt | zero point |
| Nullpunkt-Kompensation | zero point compensation |
| Nullpunktnachfuehrung | zero follow-up |
| Operationsverstaerker | operational amplifier |
| Optokoppler | photo coupler |
| OR-Gatter | OR gate |
| Platine | board |
| Plattenabmessung | board measurement |
| Programmwahlbruecke | program selection bridge |
| Quarz | crystal |
| Referenzelement | reference diode |
| Schottky-Diode | Schottky diode |
| STI | STI |
| Summer | buzzer |
| Schalter | switch |
| SIL-Schalter | SIL-switch |
| Stecker | connector |
| Silber-Draht | silver wire |
| Stiftleiste | pin connector |
| Sockel xx-polig | socket for xx pins |
| Sechskantmutter | hexagonal nut |
| Stromlaufplan | circuit diagram |
| Signal | signal |
| Speisung | supply |
| Stauchung | compression |
| Steckstift | pin |
| Steckernetzgeraet | mains transformer |
| Trimmer | trimming potentiometer |
| Tantal-Kondensator | tantalum capacitor |
| Thyristor | thyristor |
| Transistor | transistor |
| Transformator | transformer |
| Taster | push button switch |
| Temperatur | temperatur |
| Temperatur-Fuehler | temperatur sensor |
| Uebertrager | symmetrical transformer |
| VDR-Widerstand | VD resistor |
| Verdrahtungsplan | wiring diagram |
| Widerstand | resistor |
| Waegezelle | load cell |
| X-Segment-Anzeige | X-digit LED |
| Zener-Diode | Zener diode |
| Zylinderschraube mit Schlitz | cylinder head screw with slit |
| Zusatzanzeige | additional display |

seca Meß- und Wiegetechnik Vogel & Halke GmbH & Co. P.O.B. 76 11 80 2000 Hamburg 76 BRD Tel.: (040) 20 00 00-0 Fax: (040) 20 00 00 50
seca ltd. Weighing and Measuring Systems seca House 40 Barn Street Digbeth Birmingham B5 5QB England Telephone 021 643 9349
seca sarl Appareils de Pesage et de Mesure BP 29 Z.I. Rue Lavoisier 91430 Igny France Telephone: (1) 60.19.07.54 Telex 60 13 08 epgseca
seca ag Meß- und Wiegetechnik Appareils de Pesage et de Mesure Postfach Schonmattstrasse 4 CH 4153 Reinach BL1 Tel.: (061) 76 03 00
seca corporation Weighing and Measuring Systems 8920 A Route 108 Oakland Center Columbia Maryland 21045 USA Tel.: (301) 964-38 58

Preparation is important ....

## A - Power Supply

The scale can be operated either on mains supply or alternatively by using rechargeable batteries. A charger and rechargeable battery set is included. The use of these accessories in accordance with the following instructions, permits operation while connected to mains power or as a portable scale using rechargeable batteries only.

## B - Mains Operation

First turn the scale over so the base is uppermost.

- o Connect the low voltage plug attached to the accompanying mains transformer (11) to the socket (1) on the base.

- o Release the locking catches (2) used to secure the scale in transit. Using a screwdriver turn the outer flat headed screws from the position marked "transp" until the slot points to "weigh".

  NOTE: IF THE SCALE IS TO BE TRANSPORTED ANY SIGNIFICANT DISTANCE, THEN IT IS ESSENTIAL THAT THE LOCKING MECHANISM IS USED.

  Turn the screws (2) back until the slots point to "transp".

- o Now turn the scale over to the normal operation position.

- o Position the scale using the 4 adjustable feet (3) until it is completely stable.

- o Set the kg/lbs selector switch (9) for whichever weight is requird. The switch can be used at any time during a weighing operation.

- o Connect the transformer plug to the mains power supply.



seca Meß- und Wiegetechnik Vogel & Halke GmbH & Co. P.O.B. 76 11 80 2000 Hamburg 76 BRD Tel. 040/20 00 00-0 Fax 040/20 00 00 50
seca ltd. Weighing and Measuring Systems seca House 40 Barn Street Digbeth Birmingham B5 5QB England Telephone 021 643 9349
seca sarl Appareils de Pesage et de Mesure BP 29 Z.I. Rue Lavoisier 91430 gny France Telephone 11 60 19 07 54 Telex 60 13 08 epposeca
seca ag Meß- und Wiegetechnik Appareils de Pesage et de Mesure Postfach Schorrmattstrasse 4 CH 4153 Reinach BL1 Tel. 061 76 03 00
seca corporation Weighing and Measuring Systems 8920-A Route 108 Oakland Center Columbia Maryland 21045 USA Tel. 301 964-38 58

C - Preparation for Battery Operation
==========

The batteries should be charged for 24 hours before using on battery power for the first time. Turn the scale over so the base is uppermost.

- Undo the screw (10) securing the cover to the battery compartment. Check that the batteries are correctly fitted in the holder (12) and that the plug (13) from the battery holder is fitted to the low voltage connector (14).

- Release the locking catches (2) used to secure the scale in transit. Using a screwdriver turn the outer flat headed screws from the position marked "transp" until the slot points to "weigh".

  NOTE: IF THE SCALE IS TO BE TRANSPORTED ANY SIGNIFICANT DISTANCE, THEN IT IS ESSENTIAL THAT THE LOCKING MECHANISM IS USED.

  Turn the screws (2) back until the slots point to "transp".

- Now turn the scale over to the normal operation position.

- Position the scale using the 4 adjustable feet (3) until it is completely stable.

- Set the kg/lbs selector switch (9) for whichever weight is required. The switch can be used at any time during a weighing operation.

The correct way to weigh .....

A - Weighing
---

- Switch the scale on at off/on switch (5). The display will first show " " and then zero. "0:0.0" for lbs and ounces or "0.000" for kg.

  Weighing on the 727 scale is fully automatic and a zero balance will be maintained while the scale is switched on. Adjustment is made automatically for small weight changes up to 0.4 oz or 0.020 kg (10 grams).



seca Meß- und Wiegetechnik Vogel & Halke GmbH & Co P.O.B. 761180 2000 Hamburg 76 BRD Tel. 040/ 20 00 00-0 Fax 040/ 20 00 00 50
seca ltd. Weighing and Measuring Systems seca House 40 Barn Street Digbeth Birmingham B5 5QB England Telephone 021 643 9349
seca sarl Appareils de Pesage et de Mesure BP 29 Z.I. Rue Lavoisier 91430 Igny France Telephone (1) 60 19 07 54 Telex 60 13 08 epposeca
seca ag Meß- und Wiegetechnik Appareils de Pesage et de Mesure Postfach Schönmattstrasse 4 CH 4153 Reinach BL Tel. 061 / 76 03 00
seca corporation Weighing and Measuring Systems 8920-A Route 108 Oakland Center Columbia Maryland 21045 USA Tel. 301/ 964-38 58

- Should the display show a weight or a negative signal (----) at any time with nothing on the tray, then the scale should be reset at zero by switching off and on again.

- In battery operation the bar switch must be pressed to obtain a zero display.

- The weight display will switch off automatically after approximately 55 seconds to conserve battery power.

  If the word " " appears in the display, this means the batteries need recharging and the scale should be reconnected to the mains power. The batteries will be charging also even the off/on switch is off.

  If the scale capacity is exceeded the word " " will appear in the display.

B - Tare

The scale includes a tare feature to permit easy adjustment. This tare adjustment can be used to reset at zero any weight up to a maximum of 14 ounces or 0.400 kg (400 grams).

- Load scale - the weight will be shown.

- Press bar switch (7) - the scale reset to zero and the red lamp marked "TARE/HOLD" will be illuminated continuously when the tare is in use.

- Load scale - read off the weight.

The unloaded scale will automatically return to zero.

C - Hold

The scale includes a hold feature. Weights above 14 ounces and 0.400 kg (400 grams) can be locked into the display.

- Load scale - the weight will be shown.

- Press bar switch (7) - the weight will be shown and the red lamp marked "TARE/HOLD" (16) will flash on and off continuously.

17-10-07-245

a Meß- und Wiegetechnik Vogel & Halke GmbH & Co P O B 76 11 80 2000 Hamburg 76 BRD Tel 040) 20 00 00-0 Fax 040) 20 00 00 50
a td Weighing and Measuring Systems seca House 40 Barn Street Digbeth Birmingham B5 5QB England Telephone 021 643 9349
a sarl Appareils de Pesage et de Mesure BP 29 Z I Rue Lavoisier 91430 Igny France Telephone (1) 60 19 07 54 Telex 60 13 08 epdseca
a ag Meß- und Wiegetechnik Appareils de Pesage et de Mesure Postfach Schönmattstrasse 4 CH 4153 Reinach BL Tel 061) 76 03 00
a corporation Weighing and Measuring Systems 8920 A Route 108 Oakland Center Columbia Maryland 21045 USA Tel 301 964-38 58

- The weight held will remain even after a baby is removed.

- Press bar switch (7) - the scale will return to zero.

In battery operation both tare and hold features can be used in the same way as with mains power.

What to do if .....

... no display appears when the scale is switched on?

Check the mains connections at both ends.

Operate the off/on switch again.

... weight display remains at zero when scale is loaded?

Check whether the locking catches are set at "weight".

... the negative signal "----" appears in the display?

Press bar switch.

... the scale is unloaded?

Switch off and on again the reset at zero.

... the word " " appears in the display?

The batteries must be recharged.

... the word " " appears in the display?

The scale is overloaded.

Technical Data

| | | |
|---|---|---|
| Weighing range: | 0-40 lbs | 0-20 kg |
| Graduations: | 0.2 oz | 5 g |
| Tare range: | 0-14 oz | 0-0.400 kg |
| Hold range: | 14 oz-44 lbs | 0.400 kg-20 kg |
| Height: | 5 2/4" | 145 mm |
| Width: | 21 5/8" | 551 mm |
| Depth: | 12 5/8" | 320 mm |
| Weight: | 14.2 lbs | 6,5 kg |
| Power source: | Mains or battery operation | |
| Tare or zero setting: | By pressing bar switch | |
| Hold: | By pressing bar switch | |

17-10-07-245

Meß- und Wiegetechnik Vogel & Halke GmbH & Co P O B. 76 11 80 2000 Hamburg 76 BRD Tel. 040) 20 00 00-0 Fax 040) 20 00 00 60
ld Weighing and Measuring Systems seca House 40 Barn Street Digbeth Birmingham B5 5QB England Telephone 021 643 9849
ar Appareils de Pesage et de Mesure BP 29 Z.I Rue Lavoisier 91430 Igny France Telephone 1) 60 19 07 54 Telex 60 13 08 epsseca
g Meß- und Wiegetechnik Appareils de Pesage et de Mesure Postfach Schorrmattstrasse 4 CH 4153 Reinach BL Tel 061 76 03 00
rporation Weighing and Measuring Systems 8920 A Route 108 Oakland Center Columbia Maryland 21045 USA Tel 301 964-38 58

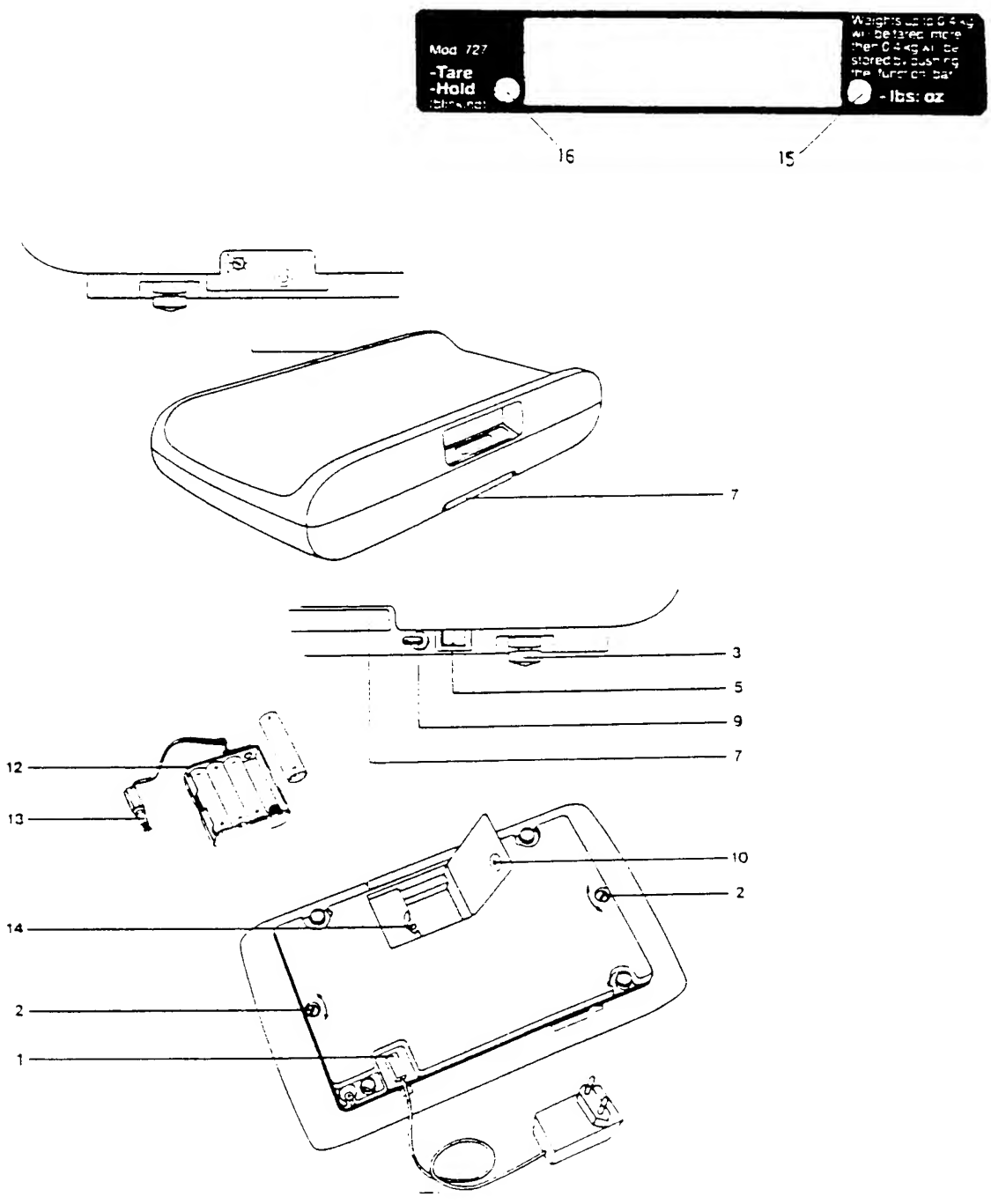


17-10-07-245

## Gravity Compensation

Instructions for Gravity Compensation (gal-value-setting)

The effect of the force of gravity is not the same everywhere in the world, but depends on latitude and also the height above sea level. The seca 727 baby scale functions so accurately that these discrepancies are actually visible through variations on the display. These discrepancies can be easily compensated for, by adjusting the arrow on the setting screw according to the scales (gal-values) shown in the table 1.

Example: situation = Sydney, (1) latitude = 35°, (2) height above sea level = 100 m, established scale according to the table = 4. For normal working conditions the scales are set at value 2. No adjustment is necessary within the complete zone covered by this value.

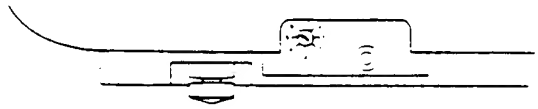

| Geogr. Breite bis / Latitude to / Latitude géographique jusqu'à / Latitud geográfica hasta / Latitudine geografica fino a | Beispiel / Example / Ejemplo / Esempio | Höhenlage über dem Meeresspiegel bis / Height above sea level / Altitude par rapport au niveau de la mer / Altura sobre el nivel del mar / Livello mare fino a | | | | | |
|---|---|---|---|---|---|---|---|
| | | 300 | 600 | 900 | 1200 | 1500 | 1800 2000 m |
| 65° | | | | | | | |
| 60° | | | | | 6 | | |
| 55° | | | | | | | |
| 50° | | | | | 5 | | |
| 45° | ① | | | | | | |
| 40° | | | | | 4 | | |
| 35° | Beispiel / Example / Ejemplo / Esempio | | | | | | |
| 30° | | | | | 3 | | |
| 25° | | | | | | | |
| 20° | | | | | 2 | | |
| 15° | | | | | | | |
| 10° | | | | | | | |
| 5° | | | | | | | |
| 0° | | | | | 1 | | |
| -5° | | | | | | | |

# 1 year

guarantee we grant on defects caused by material damage or flaw in manufacture. For electronic-parts a guarantee of 6 months is given. Each scale is examined very carefully before leaving our works but in case there will be justified reasons for claims please get in touch with the seller or the respective seca-agency in your country. Defects which are covered by the a.m. guarantee will be repaired free of charge. Further claims cannot be considered. Transportation costs are at customer's charge. In case the scale is opened by unauthorized persons the a.m. guarantee expires.

Imoortant: This guarantee is only valid in connection with the respective invoice.

Printed in Germany 17-10-07-245

Meß- und Wiegetechnik Vogel & Halke GmbH & Co. P.O.B. 76 11 80 2000 Hamburg 76 BRD Tel. 040/ 20 00 00-0 Fax 040/ 20 00 00 50
td. Weighing and Measuring Systems seca House 40 Barn Street Digbeth Birmingham B5 5QB England Telephone 021 643 9349
sar. Appareils de Pesage et de Mesure BP 29 Z.I. Rue Lavoisier 91430 Igny France Telephone (1) 60 19 07 54 Telex 60 13 08 epdseca
ag Meß- und Wiegetechnik Appareils de Pesage et de Mesure Postfach Schonmattstrasse 4 CH 4153 Reinach BL Tel. 061/ 76 03 00
corporation Weighing and Measuring Systems 8920 A Route 108 Oakland Center Columbia Maryland 21045 USA Tel. 301/ 964-38 58

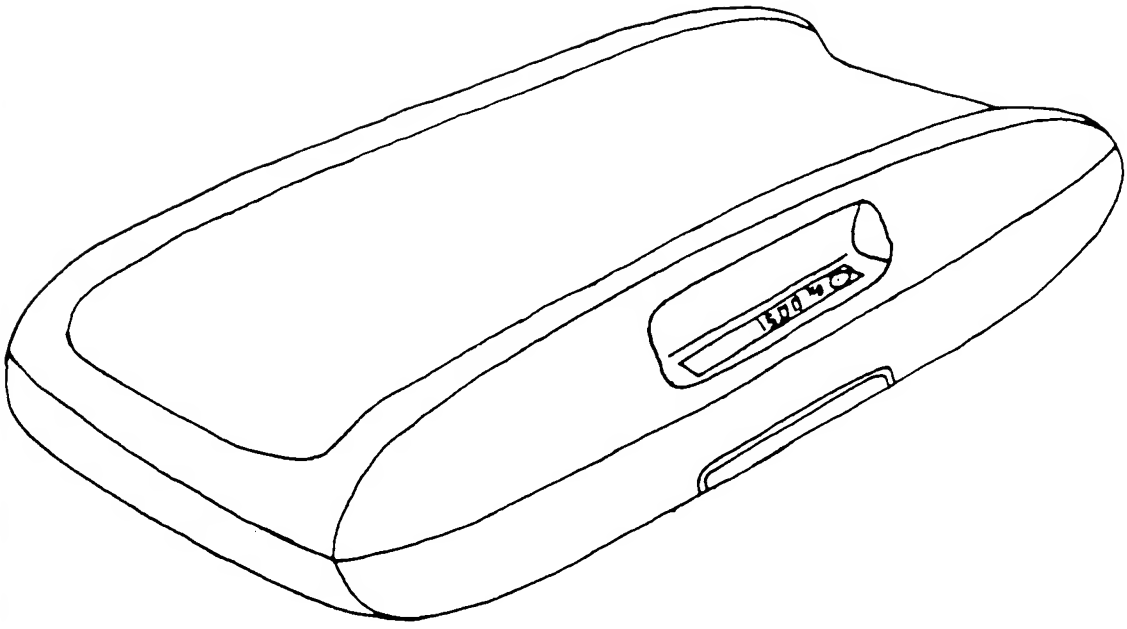

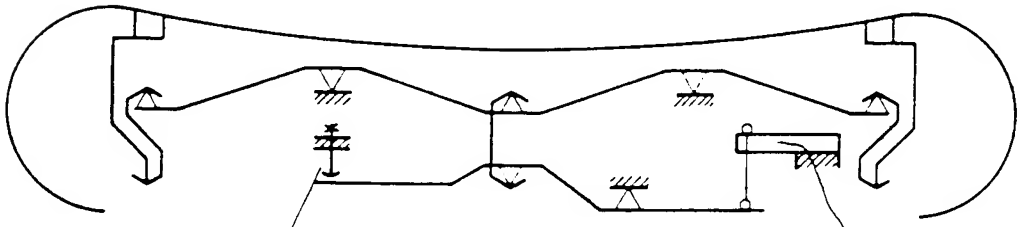


Übersetzungsverhältnis 1:1,25

Alle Rechte an und aus diesen Unterlagen verbleiben Vogel & Halke

| seca | Funktionsschema Mod. 747 | 25-01-02-271 |
|---|---|---|

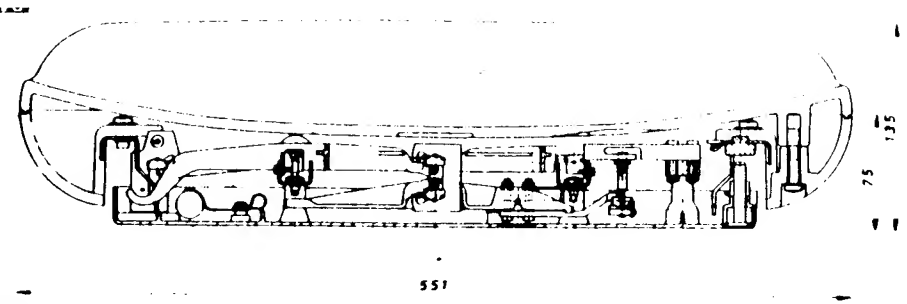


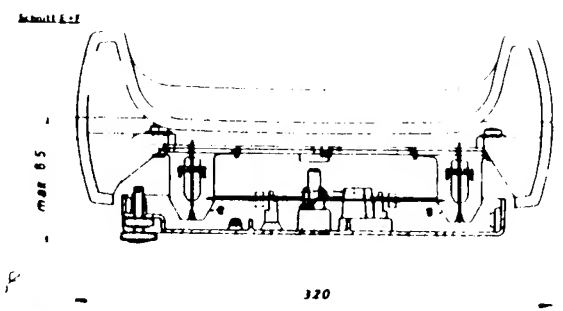


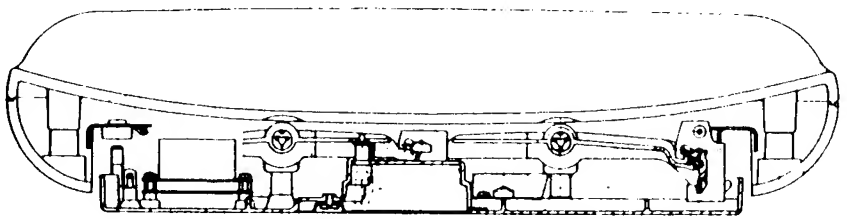

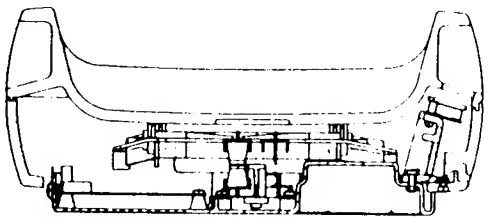

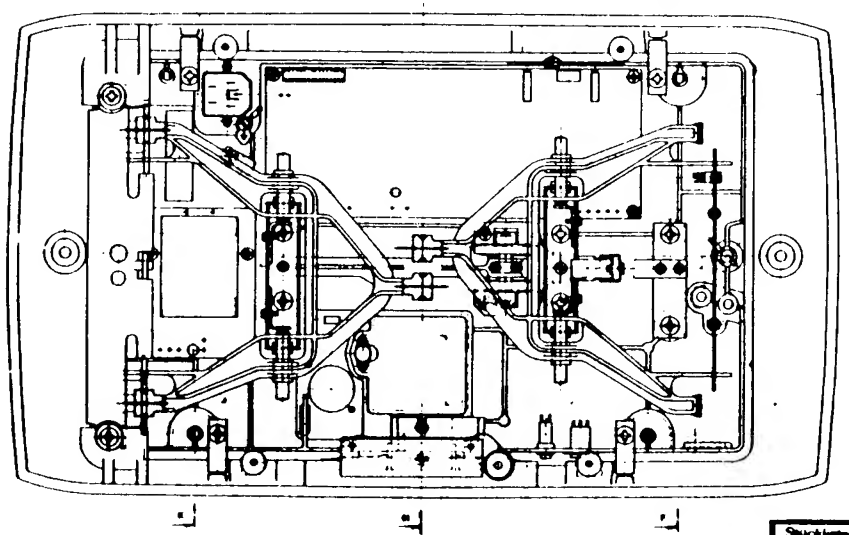

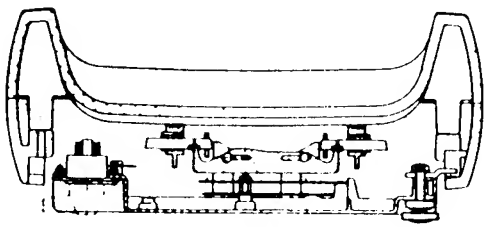

Alle Rechte an und aus diesen Unterlagen verbleiben Vogel & Halke

| | | | | | | | | |
|---|---|---|---|---|---|---|---|---|
| Stückliste | | | | Datum/Name | | | | |
| Position | | | | Änder. Mittel | | | | |
| Anzahl | | | | Index | | | | |
| seca HAMBURG | | Datum | 08.12.80 | Datum/Name | | | | |
| | | Gezeichnet | | Änder. Mittel | | | | |
| | | Geprüft | | Index | | | | |

| Maßstab | Werkstoff | Benennung | Nr |
|---|---|---|---|
| ½ | | Säuglingswaage<br>Mod 747 | 25-01-02-279 |

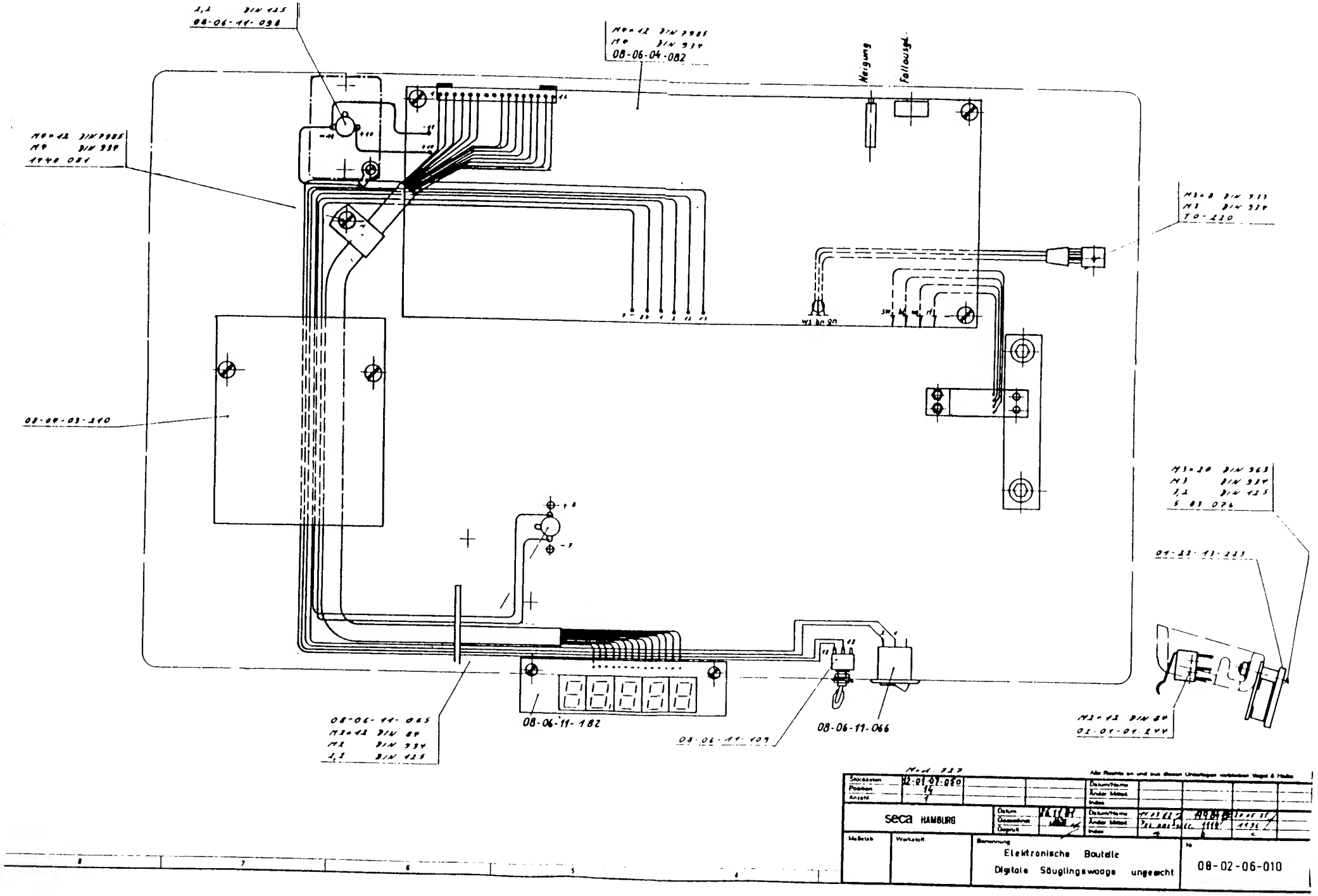

08-06-11-098
08-06-04-082
Neigung
Fallausgl.
08-04-03-210
08-06-11-182
08-06-11-066
08-06-11-109
08-06-11-065
Mod. 727
Alle Rechte an und aus diesen Unterlagen verbleiben Vogel & Heike
Stückliste
Position
Anzahl
seca HAMBURG
Datum
Gezeichnet
Geprüft
Datum/Name
Änder. Mitteil.
Index
Maßstab
Werkstoff
Benennung
Elektronische Bauteile
Digitale Säuglingswaage ungeeicht
Nr.
08-02-06-010

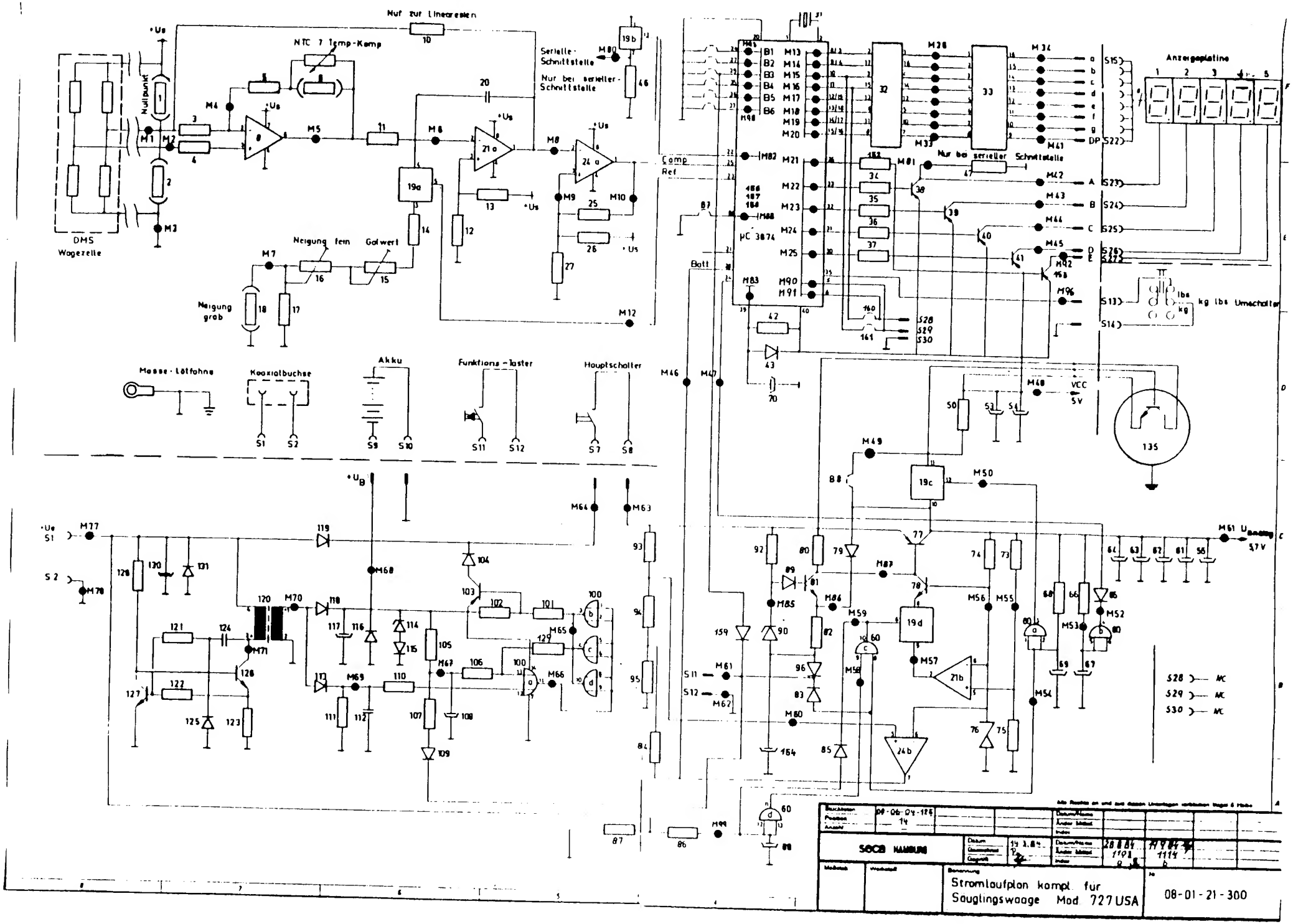

Nur zur Linearisierung
NTC 7 Temp-Komp
Serielle-Schnittstelle
Nur bei serieller-Schnittstelle
Nullpunkt
DMS Wagezelle
Neigung fein
Gotwert
Neigung grob
Masse-Lötfahne
Koaxialbuchse
Akku
Funktions-Taster
Hauptschalter
Comp
Ref
Batt
µC 3874
Anzeigeplatine
Nur bei serieller Schnittstelle
kg lbs Umschalter
VCC 5V
Uanalog 5,7V
S28 NC
S29 NC
S30 NC
SECB HAMBURG
Stromlaufplan kompl. für Säuglingswaage Mod. 727 USA
08-01-21-300

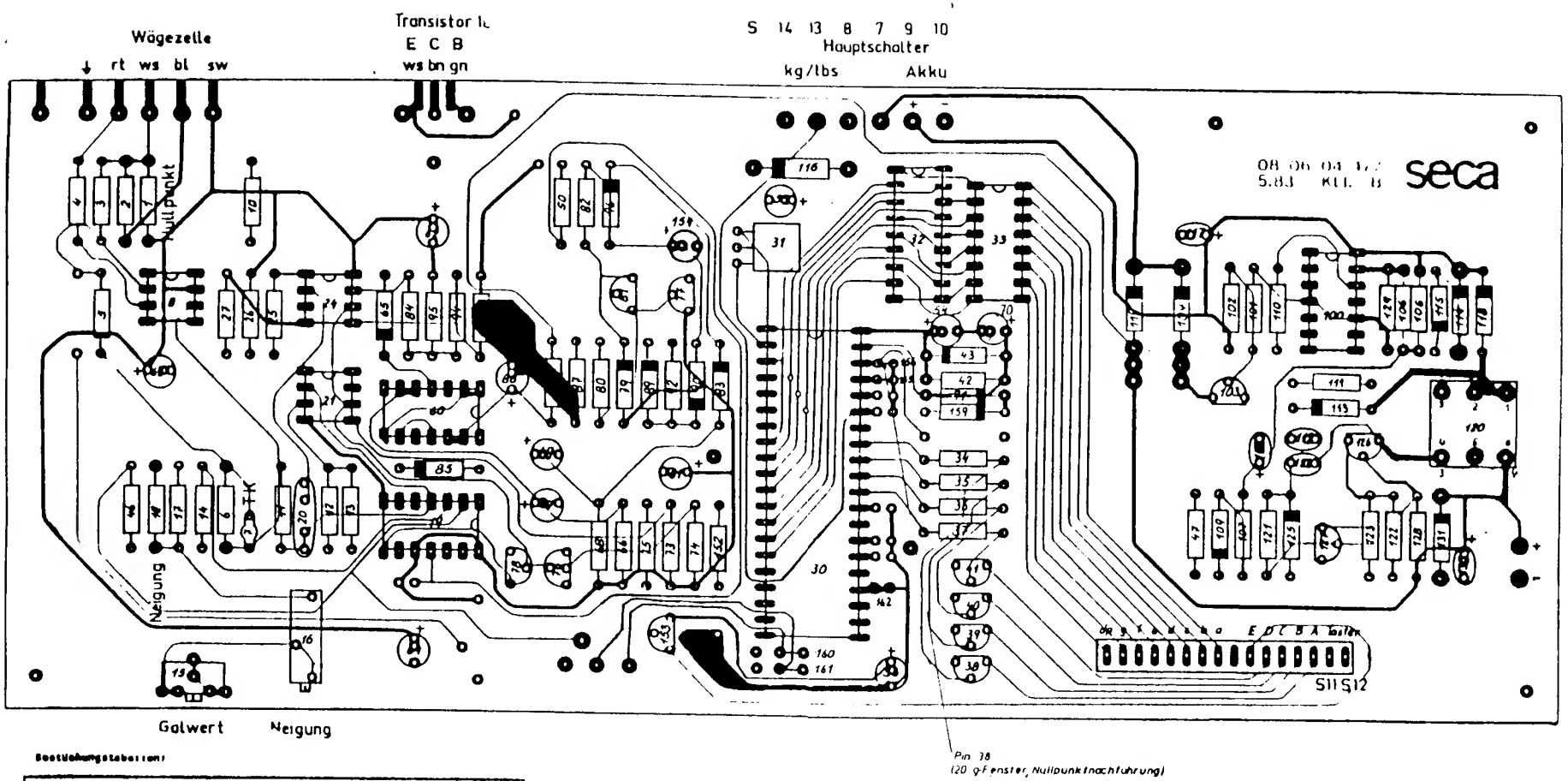


Bestückungstabellen:

| Bestückungsmodifizierungen für verschiedene Modelle * | | |
|---|---|---|
| zu Änderndes Bauteil | Modell-Ausführungen | |
| Bauteil bleibt bestehen x<br>Bauteil herausstrennen o | 727 | 727 intern, 20 kg/44 lbs |
| Diode 91 | x | o |
| Kondensator 154 | o | x |
| Brücke 158 | o | x |
| Diode 159 | o | x |
| Stromlaufplan | 08-01-21-298 | 08-01-21-300 |
| Restliche Bestückung bei allen Ausführungen gleich | | |

Bohrplan 08-06-04-479
Stromlaufplan (08-01-21-298 / 15 kg)
08-01-21-300 / 20kg

Mod. 727

| | | | | | | | | |
|---|---|---|---|---|---|---|---|---|
| Stückliste: | 08-06-04-122 | | | Datum/Name | 15.4.85 | 20.05.85 | | |
| Position: | 147 | | | Änder. Mittel | 1178 | 1176 | | |
| Anzahl: | | | | Index: | | | | |
| seca | | Datum | 10.6.83 | Datum/Name | | 28.8.84 | 23.10.84 | 27.2.86 |
| | | Gezeichnet: | | Änder. Mittel | 2888 | 1103 | 1120 | 1162 |
| | | Geprüft: | | Index: | | | | |

| Maßstab: | Werkstoff: | Benennung: | Nr. |
|---|---|---|---|
| 2:1 | | Bestückungsplan<br>Hauptplatine Säuglingswaage | 08-06-04-122 |

| And-Mittel | 1024 | 1107 | 1103 | 1162 |
|---|---|---|---|---|
| Index | a | b | c | d |

| Teil Nr | Stück | Benennung | zu Teil Nr | Material: Fertigmaße, Halbzeug, Bestell-Nr | DIN RM | Werkstoff Lieferant | seca Zeichnungs-Nr | AV: Pr/Einh (DM) | Gew/St (kg) | Mat (DM) | Lohn (DM) | Zeit (min) |
|---|---|---|---|---|---|---|---|---|---|---|---|---|
| 01 | 1 | Metallfilmwiderstand | | einmessen 471 | | | | | | | | |
| 02 | 1 | Metallfilmwiderstand | | einmessen 471 | | | | | | | | |
| 03 | 1 | Metallfilmwiderstand | | 2,21 KΩ 471 | | | 62-10-25-221 | | | | | |
| 04 | 1 | Metallfilmwiderstand | | 2,21 KΩ 471 | | | 62-10-25-221 | | | | | |
| 05 | 1 | Metallfilmwiderstand | | 100 KΩ 471 | | | 62-10-27-100 | | | | | |
| 06 | 1 | Metallfilmwiderstand | | einmessen 471 Standardw. 4,75 KΩ | | | 62-10-25-475 | | | | | |
| 07 | 1 | NTC-Widerstand | | 6,8 KΩ/4100/25° C | | Siemens | 62-50-05-680 | | | | | |
| 08 | 1 | IC | | OP 07 | | | 61-80-00-070 | | | | | |
| 09 | | | | | | | | | | | | |
| 10 | 1 | Metallfilmwiderstand | | 1,8 MΩ 471 L | | nearis | erungswid. (Richtw.) 62-10-28 | 182 | | | | |
| 11 | 1 | Metallfilmwiderstand | | 90,9 KΩ 471 | | | 62-10-26-909 | | | | | |
| 12 | 1 | Metallfilmwiderstand | | 10 KΩ 471 | | | 62-10-26-100 | | | | | |
| 13 | 1 | Metallfilmwiderstand | | 10 KΩ 471 | | | 62-10-26-100 | | | | | |
| 14 | 1 | Metallfilmwiderstand | | 150 KΩ 471 | | | 62-10-27-150 | | | | | |
| 15 | 1 | Trimmer | | 1 KΩ / stehend | | | 62-83-10-510 | | | | | |
| 16 | 1 | Trimmer | | 10 KΩ / 960-20 | | | 62-85-62-610 | | | | | |
| 17 | 1 | Metallfilmwiderstand | | 90,9 KΩ 471 | | | 62-10-26-909 | | | | | |
| 18 | 1 | Metallfilmwiderstand | | einmessen 471 | | | | | | | | |
| 19 | 1 | IC | | CD 4066 BF | | | 61-52-40-661 | | | | | |
| 20 | 1 | Kondensator | | 4,7 nF/100 V FKS 2 | | | 63-00-81-347 | | | | | |
| 21 | 1 | IC | | LM 358 N | | National | 61-80-03-580 | | | | | |
| 22 | | | | | | | | | | | | |
| 23 | | | | | | | | | | | | |
| 24 | 1 | IC | | LM 393 N | | | 61-80-03-930 | | | | | |
| 25 | 1 | Kohleschichtwiderstand | | 3,3 MΩ CR 25 | | | 62-00-38-330 | | | | | |

| Stückliste Nr | Blatt Anzahl | Blatt Nr | | Datum | Benennung | Modell | Übertrag von Blatt Nr |
|---|---|---|---|---|---|---|---|
| 08-06-04-122 | 7 | 1 | seca Hamburg | 24.06.1983 | Hauptplatine | 727 | |

| Datum, Name | 11. [illegible] | 20.1.84 | 28.8.84 | 14.12.84 | [illegible] 15.4.85 |
|---|---|---|---|---|---|
| And-Mittel | 0,88 | 1040 | 1103 | 1136 | 1178 |
| Index | a | b | c | d | e |

| Teil Nr | Stück | Benennung | zu Teil Nr | Material: Fertigmaße, Halbzeug, Bestell-Nr | DIN RM | Werkstoff Lieferant | seca Zeichnungs-Nr | AV: Pt/Einh (DM) | Gew/St (kg) | Mat (DM) | Lohn (DM) | Zeit (min) |
|---|---|---|---|---|---|---|---|---|---|---|---|---|
| 26 | 1 | Metallfilmwiderstand | | 7,15 KΩ 471 | | | 62-10-25-715 | | | | | |
| 27 | 1 | Metallfilmwiderstand | | 12,1 KΩ 471 | | | 62-10-26-121 | | | | | |
| 28 | | | | | | | | | | | | |
| 29 | 1 | Prüfetikett | 30 | | | | 14-05-01-506 | | | | | |
| 30 | 1 | Mikroprozessor | | 3870/080615207 | | Telefunken | 61-70-38-707 | | | | | |
| 31 | 1 | Quarz | | 4 MHz HC-18/U | | | 64-10-00-010 | | | | | |
| 32 | 1 | IC | | DS 8863 N | | National | 61-55-88-630 | | | | | |
| 33 | 1 | DIL-Widerstandsnetzwerk | | 100 Ω x 8 16pol. | | | 62-40-24-100 | | | | | |
| 34 | 1 | Kohleschichtwiderstand | | 1 KΩ CR 25 | | | 62-00-25-100 | | | | | |
| 35 | 1 | Kohleschichtwiderstand | | 1 KΩ CR 25 | | | 62-00-25-100 | | | | | |
| 36 | 1 | Kohleschichtwiderstand | | 1 KΩ DR 25 | | | 62-00-25-100 | | | | | |
| 37 | 1 | Kohleschichtwiderstand | | 1 KΩ CR 25 | | | 62-00-25-100 | | | | | |
| 38 | 1 | Transistor | | BC 327-25 | | | 61-10-03-272 | | | | | |
| 39 | 1 | Transistor | | BC 327-25 | | | 61-10-03-272 | | | | | |
| 40 | 1 | Transistor | | BC 327-25 | | | 61-10-03-272 | | | | | |
| 41 | 1 | Transistor | | BC 327-25 | | | 61-10-03-272 | | | | | |
| 42 | 1 | Kohleschichtwiderstand | | 10 KΩ CR 25 | | | 62-00-26-100 | | | | | |
| 43 | 1 | Diode | | 1 N 4148 | | | 61-00-41-480 | | | | | |
| 44 | | | | | | | | | | | | |
| 45 | | | | | | | | | | | | |
| 46 | 1 | Kohleschichtwiderstand | | 3,3 KΩ CR 25 | | Nur bei Verwendung der | 62-00-25-330 | | | | | |
| 47 | 1 | Kohleschichtwiderstand | | 1 KΩ CR 25 | | seriellen Schnittstelle | 62-00-25-100 | | | | | |
| 48 | | | | | | | | | | | | |
| 49 | | | | | | | | | | | | |
| 50 | 1 | Kohleschichtwiderstand | | 10 KΩ CR 25 | | | 62-00-26-100 | | | | | |

| Stückliste Nr | Blatt Anzahl | Blatt Nr | | Datum | Benennung | Modell | Übertrag von Blatt Nr |
|---|---|---|---|---|---|---|---|
| 08-06-04-122 | 7 | 2 | seca Hamburg | Bearb 24.06.1983 Gepr | Haupt atine | 727 | |

| Datum, Name | 20.1 | 28.8.84 | 7.1.85 |
|---|---|---|---|
| And-Mittel | 1107 | 1103 | 1143 |
| Index | a 10. | b n/a | c n/a |

| Teil Nr | Stück | Benennung | zu Teil Nr | Material: Fertigmaße, Halbzeug, Bestell-Nr | DIN RM | Werkstoff Lieferant | seca Zeichnungs-Nr | AV: Pr/Einh (DM) | Gew/St (kg) | Mat (DM) | Lohn (DM) | Zeit (min) |
|---|---|---|---|---|---|---|---|---|---|---|---|---|
| 51 | | | | | | | | | | | | |
| 52 | | | | | | | | | | | | |
| 53 | 1 | Tantal-C | | 10 uF/10 V | | | 63-70-10-710 | | | | | |
| 54 | 1 | Tantal-C | | 10 uF/10 V | | | 63-70-10-710 | | | | | |
| 55 | 1 | Tantal-C | | 10 uF/10 V | | | 63-70-10-710 | | | | | |
| 56 | | | | | | | | | | | | |
| 57 | | | | | | | | | | | | |
| 58 | | | | | | | | | | | | |
| 59 | | | | | | | | | | | | |
| 60 | 1 | IC | | CD 4011 BE | | | 61-52-40-111 | | | | | |
| 61 | 1 | Tantal-C | | 10 uF/10 V | | | 63-70-10-710 | | | | | |
| 62 | 1 | Tantal-C | | 10 uF/10 V | | | 63-70-10-710 | | | | | |
| 63 | 1 | Tantal-C | | 10 uF/10 V | | | 63-70-10-710 | | | | | |
| 64 | 1 | Tantal-C | | 10 uF/10 V | | | 63-70-10-710 | | | | | |
| 65 | 1 | Diode | | 1 N 5818 | | | 61-01-58-180 | | | | | |
| 66 | 1 | Kohleschichtwiderstand | | 220 KΩ CR 25 | | | 62-00-27-220 | | | | | |
| 67 | 1 | Tantal-C | | 1 uF/35 V | | | 63-70-40-610 | | | | | |
| 68 | 1 | Kohleschichtwiderstand | | 3,9 MΩ CR 25 | | | 62-00-28-390 | | | | | |
| 69 | 1 | Tantal-C | | 22 µF /16V | | | 63-70-20-722 | | | | | |
| 70 | 1 | Tantal-C | | 10 uF/10 V | | | 63-70-10-710 | | | | | |
| 71 | | | | | | | | | | | | |
| 72 | | | | | | | | | | | | |
| 73 | 1 | Metallfilmwiderstand | | 10 KΩ 471 | | | 62-10-26-100 | | | | | |
| 74 | 1 | Metallfilmwiderstand | | 3,01 KΩ 471 | | | 62-10-25-301 | | | | | |
| 75 | 1 | Metallfilmwiderstand | | 7,5 KΩ 471 | | | 62-10-25-750 | | | | | |

| Stückliste Nr | Blatt Anzahl | Blatt Nr | | Datum | Benennung | Modell | Übertrag von Blatt Nr |
|---|---|---|---|---|---|---|---|
| 08-06-04-122 | 7 | 3 | seca Hamburg | Bearb 24.06.1983 | Hauptplatine | 727 | |
| | | | | Gepr | | | |

| Datum, Name | 20 34 | 28.8.84 | 19.9.84 |
|---|---|---|---|
| And-Mittel | 1040 | 1103 | 1114 |
| Index | a | b | c |

| Teil Nr. | Stück | Benennung | zu Teil Nr | Material: Fertigmaße, Halbzeug, Bestell-Nr | DIN RM | Werkstoff Lieferant | seca Zeichnungs-Nr | AV: Pr/Einh (DM) | Gew/St (kg) | Mat (DM) | Lohn (DM) | Zeit (min) |
|---|---|---|---|---|---|---|---|---|---|---|---|---|
| 76 | 1 | Referenzelement | | LM 336 Z | | | 61-30-03-365 | | | | | |
| 77 | 1 | Transistor | | BC 307 B | | | 61-10-03-072 | | | | | |
| 78 | 1 | Transistor | | BC 237 B | | | 61-10-02-372 | | | | | |
| 79 | 1 | Diode | | 1 N 4148 | | | 61-00-41-480 | | | | | |
| 80 | 1 | Kohleschichtwiderstand | | 1 KΩ CR 25 | | | 62-00-25-100 | | | | | |
| 81 | 1 | Transistor | | BC 237 B | | | 61-10-02-372 | | | | | |
| 82 | 1 | Kohleschichtwiderstand | | 2,2 KΩ CR 25 | | | 62-00-25-100 | | | | | |
| 83 | 1 | Diode | | 1 N 4148 | | | 61-00-41-480 | | | | | |
| 84 | 1 | Kohleschichtwiderstand | | 2,2 MΩ CR 25 | | | 62-00-28-220 | | | | | |
| 85 | 1 | Diode | | 1 N 4148 | | | 61-00-41-480 | | | | | |
| 86 | 1 | Kohleschichtwiderstand | | 100 KΩ CR 25 | | | 62-00-27-100 | | | | | |
| 87 | 1 | Kohleschichtwiderstand | | 100 KΩ CR 25 | | | 62-00-27-100 | | | | | |
| 88 | 1 | Tantal-C | | 1 uF/35 V | | | 63-70-40-610 | | | | | |
| 89 | 1 | Diode | | 1 N 4148 | | | 61-00-41-480 | | | | | |
| 90 | 1 | Zenerdiode | | BZX 83 3,3 V | | | 61-03-00-330 | | | | | |
| 91 | | | | | | | | | | | | |
| 92 | 1 | Kohleschichtwiderstand | | 1 KΩ CR 25 | | | 62-00-25-100 | | | | | |
| 93 | 1 | Metallfilmwiderstand | | 750 KΩ 471 | | | 62-10-27-750 | | | | | |
| 94 | 1 | Metallfilmwiderstand | | 365 KΩ 471 | | | 62-10-27-365 | | | | | |
| 95 | 1 | Metallfilmwiderstand | | 100 KΩ 471 | | | 62-10-27-100 | | | | | |
| 96 | 1 | Diode | | 1 N 4148 | | | 61-00-41-480 | | | | | |
| 97 | | | | | | | | | | | | |
| 98 | | | | | | | | | | | | |
| 99 | | | | | | | | | | | | |
| 100 | 1 | IC | | CD 4001 BE | | | 61-52-40-011 | | | | | |

| Stückliste Nr | Blatt Anzahl | Blatt Nr | | Datum Bearb | Datum Gepr | Benennung | Modell | Übertrag von Blatt Nr |
|---|---|---|---|---|---|---|---|---|
| 08-06-04-122 | 7 | 4 | seca Hamburg | 24.06.1983 | | Hauptplatine | 727 | |

| Datum, Name | 28 4 | 23.10.84 | 27.2.85 | 15.4.85 |
|---|---|---|---|---|
| And-Mitteil | 1103 | 1120 | 1162 | 1178 |
| Index | a | b | c | d |

| Teil Nr | Stück | Benennung | zu Teil Nr | Material: Fertigmaße, Halbzeug, Bestell-Nr | | DIN RM | Werkstoff Lieferant | seca Zeichnungs-Nr | AV: Pr/Einh (DM) | Gew/St (kg) | Mat (DM) | Lohn (DM) | Zeit (min) |
|---|---|---|---|---|---|---|---|---|---|---|---|---|---|
| 101 | 1 | Kohleschichtwiderstand | | 1 KΩ | CR 25 | | | 62-00-25-100 | | | | | |
| 102 | 1 | Kohleschichtwiderstand | | 10 KΩ | CR 25 | | | 62-00-26-100 | | | | | |
| 103 | 1 | Transistor | | BC 327-25 | | | | 61-10-03-272 | | | | | |
| 104 | 1 | Schottky-Diode | | 1 N 5818 | | | | 61-01-58-180 | | | | | |
| 105 | 1 | Kohleschichtwiderstand | | 3,9 MΩ | CR 25 | | | 62-00-28-390 | | | | | |
| 106 | 1 | Kohleschichtwiderstand | | 1 MΩ | CR 25 | | | 62-00-28-100 | | | | | |
| 107 | 1 | Kohleschichtwiderstand | | 270 Ω | CR 25 | | | 62-00-24-270 | | | | | |
| 108 | 1 | Tantal-C | | 22 uF/16 V | | | | 63-70-20-722 | | | | | |
| 109 | 1 | Diode | | 1 N 4148 | | | | 61-00-41-480 | | | | | |
| 110 | 1 | Kohleschichtwiderstand | | 1 MΩ | CR 25 | | | 62-00-28-100 | | | | | |
| 111 | 1 | Kohleschichtwiderstand | | 220 KΩ | CR 25 | | | 62-00-27-220 | | | | | |
| 112 | 1 | Kondensator | | 10 nF | EDPU | | | 63-20-70-410 | | | | | |
| 113 | 1 | Diode | | 1 N 4148 | | | | 61-00-41-480 | | | | | |
| 114 | 1 | Z-Diode | | ZPY 15 | | | ITT | 61-03-01-500 | | | | | |
| 115 | 1 | Diode | | 1 N 4148 | | | | 61-00-41-480 | | | | | |
| 116 | 1 | Diode | | HAB 005 | | | | 61-02-00-050 | | | | | |
| 117 | 1 | Tantal-C | | 10 uF/25 V | | | | 63-70-30-710 | | | | | |
| 118 | 1 | Diode | | 1 N 4148 | | | | 61-00-41-480 | | | | | |
| 119 | 1 | Schottky-Diode | | 1 N 5818 | | | | 61-01-58-180 | | | | | |
| 120 | 1 | Übertrager | | | | | | 08-06-10-245 | | | | | |
| 121 | 1 | Kohleschichtwiderstand | | 47 KΩ | CR 25 | | | 62-00-26-470 | | | | | |
| 122 | 1 | Kohleschichtwiderstand | | 4,7 KΩ | CR 25 | | | 62-00-25-470 | | | | | |
| 123 | 1 | Kohleschichtwiderstand | | 6,8 | CR 25 | | | 62-00-22-680 | | | | | |
| 124 | 1 | Kondensator | | 470 pF | EDPU | | | | | | | | |
| 125 | 1 | Diode | | 1 N 4148 | | | | 61-00-41-480 | | | | | |

| Stückliste Nr | Blatt Anzahl | Blatt Nr | | Datum | Benennung | Modell | Übertrag von Blatt Nr |
|---|---|---|---|---|---|---|---|
| 08-06-04-122 | 7 | 5 | seca Hamburg | 24.06.1983 | Hauptplatine | 727 | |

| Datum, Name | 28. 4 | 19.9.84 | 20.05.1985 |
|---|---|---|---|
| And-Mittel | 1103 | 1114 | 1196 |
| Index | a | b | c |

| Teil Nr | Stück | Benennung | zu Teil Nr. | Material: Fertigmaße, Halbzeug, Bestell-Nr | Material: DIN RM | Material: Werkstoff Lieferant | seca Zeichnungs-Nr | AV: Pr/Einh (DM) | AV: Gew/St (kg) | AV: Mat (DM) | AV: Lohn (DM) | AV: Zeit (min) |
|---|---|---|---|---|---|---|---|---|---|---|---|---|
| 126 | 1 | Transistor | | BC 337-B | | | 61-10-03-372 | | | | | |
| 127 | 1 | Transistor | | BC 237-B | | | 61-10-02-372 | | | | | |
| 128 | 1 | Kohleschichtwiderstand | | 4,7 KΩ CR 25 | | | 62-00-25-470 | | | | | |
| 129 | 1 | Kohleschichtwiderstand | | 10 MΩ | | | 62-00-39-100 | | | | | |
| 130 | 1 | Tantal-C | | 10 uF/25 V | | | 63-70-30-710 | | | | | |
| 131 | 1 | Diode | | 1 N 4002 | | | 61-00-40-020 | | | | | |
| 132 | | | | | | | | | | | | |
| 133 | | | | | | | | | | | | |
| 134 | | | | | | | | | | | | |
| 135 | 1 | Kabel mit Transistor | | | | | 08-06-11-171 | | | | | |
| 136 | | | | | | | | | | | | |
| 137 | | | | | | | | | | | | |
| 138 | 1 | Stiftleiste | | 16polig 6410 | | Molex | 65-44-01-625 | | | | | |
| 139 | 8 | Lötstifte, klein | | | | | 66-30-20-010 | | | | | |
| 140 | 8 | Steckstift | | | | | 66-30-10-010 | | | | | |
| 141 | 1 | Isollerband | | 19x20 mm/schwarz | | Scotch | 18-01-06-234 | | | | | |
| 142 | | | | | | | | | | | | |
| 143 | | | | | | | | | | | | |
| 144 | | | | | | | | | | | | |
| 145 | 1 | Leiterplatte | | 66-16-04-477 | | | 08-06-04-477 | | | | | |
| 146 | | Bohrplan | | | | | 08-06-04-479 | | | | | |
| 147 | | Bestückungsplan | | | | | 08-06-04-122 | | | | | |
| 148 | | Stromlaufplan | | | | | 08-01-21-300 | | | | | |
| 149 | | | | | | | | | | | | |
| 150 | | | | | | | | | | | | |

| Stückliste Nr | Blatt Anzahl | Blatt Nr | | Datum | Benennung | Modell | Übertrag von Blatt Nr |
|---|---|---|---|---|---|---|---|
| 08-06-04-122 | 7 | 6 | seca Hamburg | 24.06.1983 | Hauptplatine | 727 | |

| Datum, Name | 15. |
|---|---|
| And.-Mittel | 1178 |
| Index | a |

| Teil Nr | Stück | Benennung | zu Teil Nr. | Material: Fertigmaße, Halbzeug, Bestell-Nr | Material: DIN RM | Material: Werkstoff Lieferant | seca Zeichnungs-Nr | AV: Pr/Einh (DM) | AV: Gew/St (kg) | AV: Mat (DM) | AV: Lohn (DM) | AV: Zeit (min) |
|---|---|---|---|---|---|---|---|---|---|---|---|---|
| 151 | | | | | | | | | | | | |
| 152 | 1 | Kohleschichtwiderstand | | 1 KO CR 25 | | | 62-00-25-100 | | | | | |
| 153 | 1 | Transistor | | BC 327-25 | | | 61-10-03-272 | | | | | |
| 154 | 1 | Tantalkondensator | | 10 µF/16V | | | 63-70-20-710 | | | | | |
| 155 | 1 | Programmwahlbrücke am Pin 37 von 30 | | 1Raster=2,5mm | | siehe | | | | | | |
| 156 | 1 | Programmwahlbrücke am Pin 38 von 30 | | 1Raster=2,5mm | Bestückungspl. | | 08-06-04-122 | | | | | |
| 157 | | | | | | | | | | | | |
| 158 | 1 | IC-Sockel | | 40 pol. | | | 65-51-00-400 | | | | | |
| 159 | 1 | Diode | | 1N4148 | | | 61-00-41-480 | | | | | |
| 160 | 1 | Drahtbrücke | | 3,8 mm lg.-0,5 mm ø | | | 67-01-30-100 | | | | | |
| 161 | 1 | Drahtbrücke | | 3,8 mm lg.-0,5 mm ø | | | 67-01-30-100 | | | | | |
| 162 | 1 | Programmwahlbrücke am Pin 24 von 30 | | 1Raster=2,5mm | s.Bestückungspl. | | 08-06-04-122 | | | | | |
| 163 | | | | | | | | | | | | |
| 164 | | | | | | | | | | | | |
| 165 | | | | | | | | | | | | |
| | | Hauptplatine | | ( Listenabrg. 7271 ) | | | | | | | | |

| Stückliste Nr | Blatt Anzahl | Blatt Nr | | Datum | Benennung | Modell | Übertrag von Blatt Nr |
|---|---|---|---|---|---|---|---|
| 08-06-04-122 | 7 | 7 | seca Hamburg | 28.8.84 | Hauptplatine | 727 | |

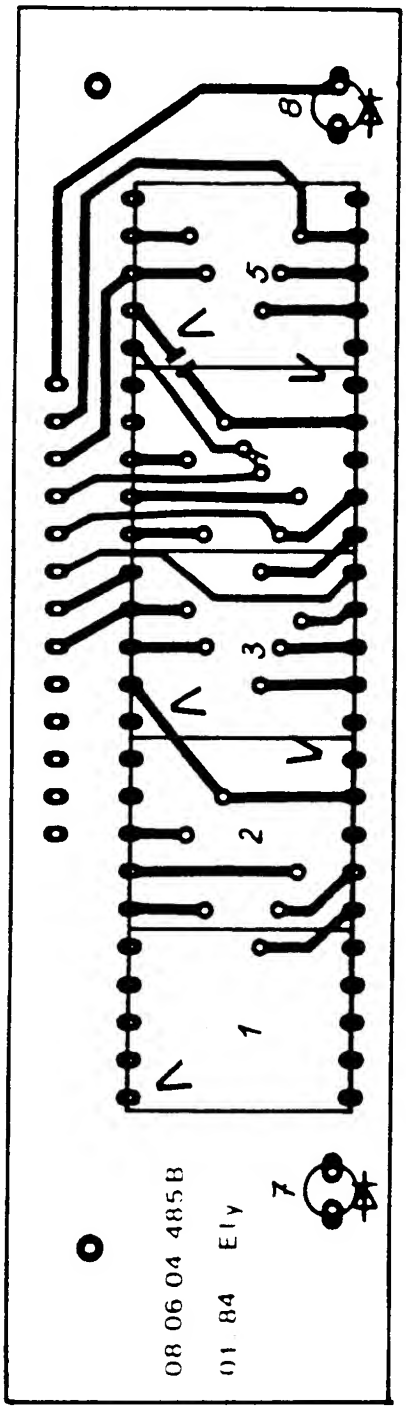


Maßstab 1:1
Lage für Dezimalpunkt beachten.

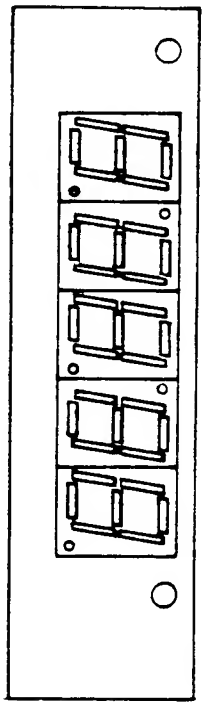

| | | | | | | | | |
|---|---|---|---|---|---|---|---|---|
| Stücklisten: | 08-06-04-182 | | | | Datum/Name | | | |
| Position: | 01 | | | | Änder. Mitteil.: | | | |
| Anzahl: | 1 | | | | Index: | | | |
| seca HAMBURG | | | Datum: | 13.3.84 | Datum/Name: | | | |
| | | | Gezeichnet: | | Änder. Mitteil.: | | | |
| | | | Geprüft: | | Index: | | | |

| Maßstab: | Werkstoff: | Benennung: | Nr. |
|---|---|---|---|
| 2 : 1 ( 1 : 1 ) | | Bestückungsplan Anzeigeplatine Mod 727 USA | 08-06-04-125 |

17-1-0-0-57a

| Datum, Name | | | | | | | | | | | | | | |
|---|---|---|---|---|---|---|---|---|---|---|---|---|---|---|
| And - Mittel | | | | | | | | | | | | | | |
| Index | | | | | | | | | | | | | | |

| Teil Nr | Stück | Benennung | zu Teil Nr | Material: Fertigmaße, Halbzeug, Bestell - Nr | Material: DIN RM | Material: Werkstoff Lieferant | seca Zeichnungs - Nr | AV: Pr/Einh (DM) | AV: Gew/St. (kg) | AV: Mat (DM) | AV: Lohn (DM) | AV: Zeit (min) |
|---|---|---|---|---|---|---|---|---|---|---|---|---|
| 01 | 1 | LED-Azeige | | HA 1141 R | | Siemens | 61-95-11-410 | | | | | |
| 02 | 1 | LED-Anzeige | | HA 1141 R | | Siemens | 61-95-11-410 | | | | | |
| 03 | 1 | LED-Anzeige | | HA 1141 R | | Siemens | 61-95-11-410 | | | | | |
| 04 | 1 | LED-Anzeige | | HA 1141 R | | Siemens | 61-95-11-410 | | | | | |
| 05 | 1 | LED-Anzeige | | HA 1141 R | | Siemens | 61-95-11-410 | | | | | |
| 06 | | | | | | | | | | | | |
| 07 | 1 | Leuchtdiode 3 mm rot | | CQV 10-3 | | Siemens | 61-90-00-111 | | | | | |
| 08 | 1 | Leuchtdiode 3 mm rot | | CQV 10-3 | | Siemens | 61-90-00-111 | | | | | |
| 09 | | | | | | | | | | | | |
| 10 | | | | | | | | | | | | |
| 11 | 1 | Leiterplatte | | | | | 08-06-04-485 | | | | | |
| 12 | | Bohrplan | | | | | 08-06-04-486 | | | | | |
| 13 | | Bestückungsplan | | | | | 08-06-04-125 | | | | | |
| 14 | | Stromlaufplan | | | | | 08-01-21-300 | | | | | |
| 15 | | | | | | | | | | | | |
| 16 | | | | | | | | | | | | |
| 17 | | | | | | | | | | | | |
| 18 | | | | | | | | | | | | |
| 19 | | | | | | | | | | | | |
| 20 | | | | | | | | | | | | |
| 21 | | | | | | | | | | | | |
| 22 | | | | | | | | | | | | |
| 23 | | | | | | | | | | | | |
| 24 | | | | | | | | | | | | |
| 25 | | | | | | | | | | | | |

| Stückliste Nr | Blatt Anzahl | Blatt Nr | | Datum | Benennung | Modell | Übertrag von Blatt Nr |
|---|---|---|---|---|---|---|---|
| 08-06-04-125 | 1 | 1 | seca Hamburg | 14.03.84 | Anzeigeplatine [illegible] / 20 kg | 727 | |

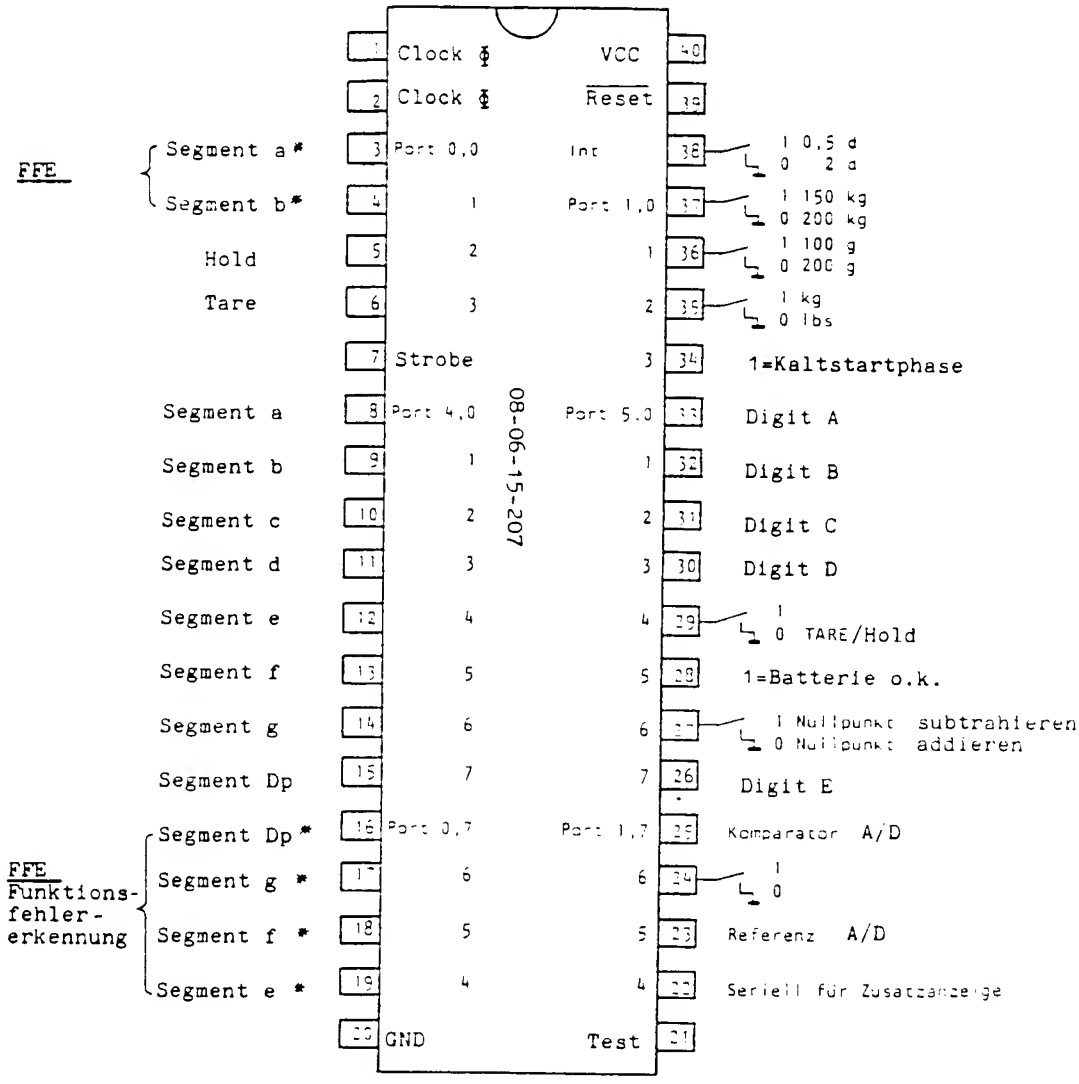


1≙keine Brücke=Highpegel
0≙ Brücke=Lowpegel

| Pin: 38 | 37 | 36 | 35 | |
|---|---|---|---|---|
| 1 | 0 | 0 | 0 | Interne Auflösung |
| 0 | 1 | 1 | 0 | 4% Nullpunktnachführung: 747 Export<br>920 Export |

| Pin: 29 | 24 | |
|---|---|---|
| 1 | 1 | 707,708,727,747,770,920 |
| 1 | 0 | 727 Export |
| 0 | 1 | } Neuentwicklungen |
| 0 | 0 | |

Mod. 707/708/770 727 747 920

Alle Rechte an und aus diesen Unterlagen verbleiben Vogel & Halke

| Stücklisten | 08-06-04-068 | 08-06-04-122 | 08-06-04-078 | 08-06-04-106 |
|---|---|---|---|---|
| Position | 65 | 30 | 151 | 01 |
| Anzahl | – | – | – | – |

seca HAMBURG

| Datum | 14.3.85 | Datum/Name |
|---|---|---|
| Gezeichnet | Pu | Änder Mitteil |
| Geprüft | | Index |

Maßstab ./.

Werkstoff ./.

Benennung: Pinbelegung 3870 uC mit Programm 3

Nr. 08-06-1 08